City of Pinole

Pinole/Hercules WPCP Project

Technical Memorandum 13

Solids Handling

March 1, 2013

PRELIMINARY
FOR REVIEW ONLY

REGISTERED PROFESSIONAL ENGINEER
Craig Olson
No. 39819
Exp. 12/31/2013
CIVIL
STATE OF CALIFORNIA

Prepared under the responsible charge of

Craig Olson
39819

HDR
2365 Iron Point Road, Suite 300
Folsom, CA 95630

DRAFT

Contents

Executive Summary **1**
Purpose 1
Background 1
Conclusions 1
Introduction **3**
Existing Facilities **3**
Solids Processing **8**
Proposed Flow Diagram 8
Sludge Thickening Design Criteria and Alternatives **11**
Design Criteria 11
Design Alternatives 11
Rotary Screen Thickeners 11
Gravity Belt Thickener 12
Sludge Dewatering Design Criteria and Alternatives **14**
Design Criteria 14
Design Alternatives 14
Centrifuges 14
Belt Filter Press 15
Screw Press 16
Recommended Project **18**
Site Constraints Analysis 20
Construction Sequencing 25
Cost Estimate **25**
Conclusions **26**
Appendix A. Solids Mass Balance **27**
Appendix B. Manufacture Cutsheets **28**
Appendix C. Cost Estimates **29**

Figures

Figure 13-1. Solids Handling Facility 2
Figure 13-2. Existing Solids Process Flow Schematic 4
Figure 13-3. Location of Existing Solids Handling Facilities 7
Figure 13-4. Proposed Solids Handling Flow Diagram 9
Figure 13-5. Solids Mass Balance for Projected Maximum Month Conditions 10
Figure 13-6. Solids Handling Building Ground Level 19
Figure 13-7. Solids Handling Building Upper Level 21
Figure 13-8. Solids Handling Building Southwest Building Elevation with Polymer Storage Building 22
Figure 13-9. Solids Handling Building Cross Section 23
Figure 13-10. Site Plan Solids Handling Building 24

DRAFT

Tables

Table 13-1. Existing Solids Handling Equipment 4
Table 13-2. Design Criteria for Solids Handling Facilities 8
Table 13-3. Sludge Thickening Design Criteria 11
Table 13-4. Rotary Screen Thickener Design Criteria 12
Table 13-5. Advantages and Disadvantages of Rotary Screen Thickeners 12
Table 13-6. Gravity Belt Thickener Design Criteria 12
Table 13-7. Advantages and Disadvantages of Gravity Belt Thickeners 13
Table 13-8. Thickening Technology Comparison 13
Table 13-9. Sludge Dewatering Design Criteria 14
Table 13-10. Centrifuge Design Criteria 14
Table 13-11. Advantages and Disadvantages of Centrifuges 15
Table 13-12. Belt Filter Press Design Criteria 15
Table 13-13. Advantages and Disadvantages of Belt Filter Press 16
Table 13-14. Screw Press Manufacturer Comparison 17
Table 13-15. Screw Press Design Criteria 17
Table 13-16. Advantages and Disadvantages of Screw Press 17
Table 13-17. Dewatering Technology Comparison 18
Table 13-18. Cost Summary for Solids Handling Options 26

DRAFT

TM 13 - SOLIDS HANDLING

Pinole/Hercules WPCP Project ***March 1, 2013***

Reviewed by: Craig Olson, P.E.

Prepared by: Ted Kontonickas, P.E.

Executive Summary

Purpose

The purpose of this technical memorandum (TM) is to establish design and operating performance criteria for new solids handling facilities at the Pinole/Hercules Water Pollution Control Plant (WPCP).

Background

The WPCP was issued a new National Pollutant Discharge Elimination System (NPDES) permit in August 2012. Based on the permit requirements, upgrades to the liquid treatment processes are required to be online by 2017. A new Solids Handling Facility housing relocated equipment and new equipment for replacement of the existing solids handling facilities is needed to accommodate upgrades to the secondary treatment facilities. This TM provides details of the new solids handling facility which includes a new solids storage tank, new thickening and dewatering equipment, and odor control. The solids handling facility will continue to thicken both primary and secondary waste actuated sludge (WAS) prior to anaerobic digestion. Upgrades and modifications to the anaerobic digestion system are not part of the preliminary design effort. Digester loading rates and digester solids residence time were reviewed as part of the preliminary design activities to confirm that the proposed modifications would maintain the WPCP's ability to produce Class B biosolids and would not negatively impact the anaerobic digester performance.

Conclusions

Solids from Primary Clarifiers No. 1 and No. 2 will be blended with WAS in a sludge storage tank. Sludge will be thickened to approximately 5-7 percent solids in rotary screen thickeners (RST) and pumped to the existing anaerobic digesters. After digestion, sludge will be dewatered to approximately 18-percent solids in a centrifuge. Dewatered solids will drop into a dump truck to be hauled to a landfill. A layout of the proposed Solids Handling Facility is provided in Figure 13-1.

The estimated 2012 cost of construction for the new Solids Handling Facility is $3,938,000.

DRAFT

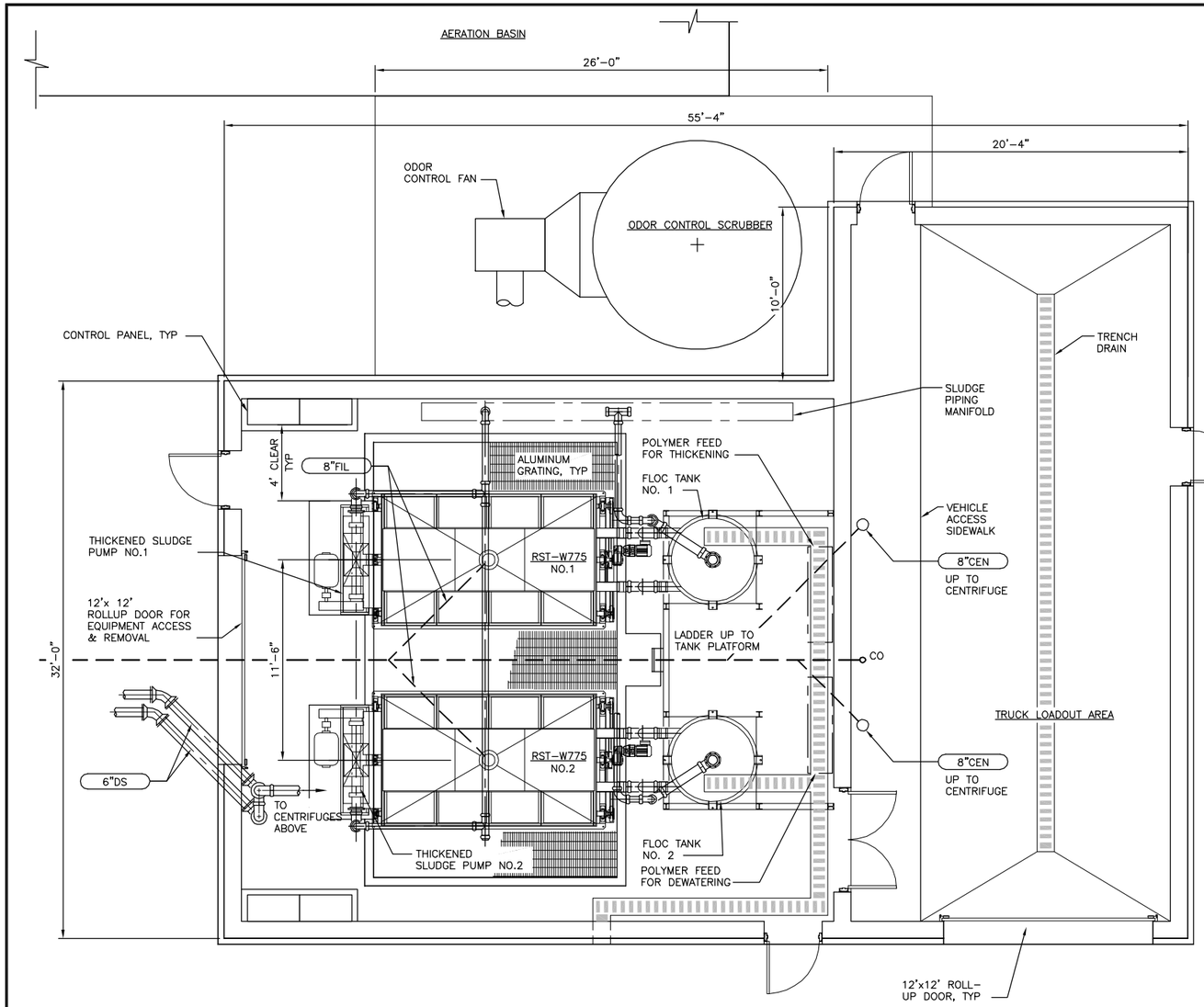

LOWER LEVEL
THICKENING AND LOADOUT
1/8" = 1'-0"

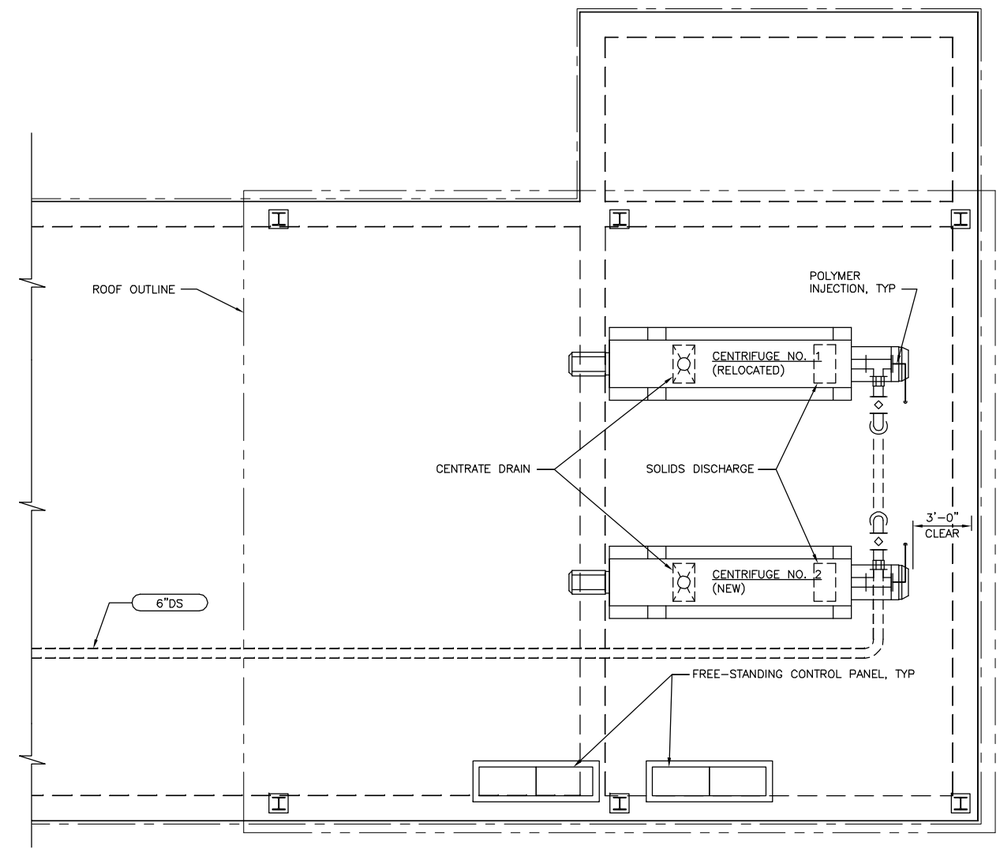

UPPER LEVEL DEWATERING
1/8" = 1'-0"

PINOLE/HERCULES WPCP PROJECT

SOLIDS HANDLING FACILITY

HDR

Figure 13-1

G:\pwworking\sac\d0427215\Figure 13-1.dwg
02-28-13 RSNIDER 13:11:31

Introduction

The Pinole/Hercules Water Pollution Control Plant (WPCP) is preparing a preliminary design for treatment plant upgrades that are required to meet the WPCP's new Regional Water Quality Control Board National Pollutant Discharge Elimination System (NPDES) Permit No. CA0037796, issued on August 14, 2012. The permit requires secondary treatment for peak wet weather flows (PWWF) up to 20.0 million gallons per day (mgd).

The existing solids handling facilities need to be relocated to accommodate the secondary treatment upgrades and relocated and new equipment will need to be placed in a larger facility. The purpose of the technical memorandum ™ is to analyze the existing facilities and operations, analyze and evaluate thickening and dewatering equipment, identify a location for the new facilities, and establish design and operating performance criteria for the selected solids handling facilities. The components of this TM include the following:

- Review of Existing Facilities
- Evaluation of Sludge Thickening Alternatives
- Evaluation of Sludge Dewatering Alternatives
- Presentation of Site Considerations
- Estimation of Cost
- Conclusions.

The new solids handling facility is designed to accommodate future solids loads (buildout conditions).

Existing Facilities

The existing solids handling facilities include grit removal for primary sludge, a gravity sludge thickener (GST), a rotary screen thickener (RST), anaerobic digesters, and a centrifuge for dewatering. A solids process flow schematic of the existing solids processing is provided in Figure 13-2, and existing equipment sizing is provided in Table 13-1.

Primary sludge is pumped via recessed impeller, centrifugal pumps from the primary clarifiers to a grit cyclone. The primary sludge pumps operate on a timer and cycle on every 30 minutes and pump for a total of 10 minutes. The existing primary clarifiers are shallow (approximately 8 to 10 feet deep) and have a sludge sump that is approximately 40 gallons. Given the primary sludge pumps, the depth of the clarifier, and the sump size, minimal thickening occurs in the primary clarifiers, and primary sludge is typically 0.25 to 0.50-percent solids. WPCP staff have indicated that when primary sludge reaches a concentration of 1 percent solids or greater, the primary sludge pipelines plug because of the grit content in the primary sludge.

DRAFT

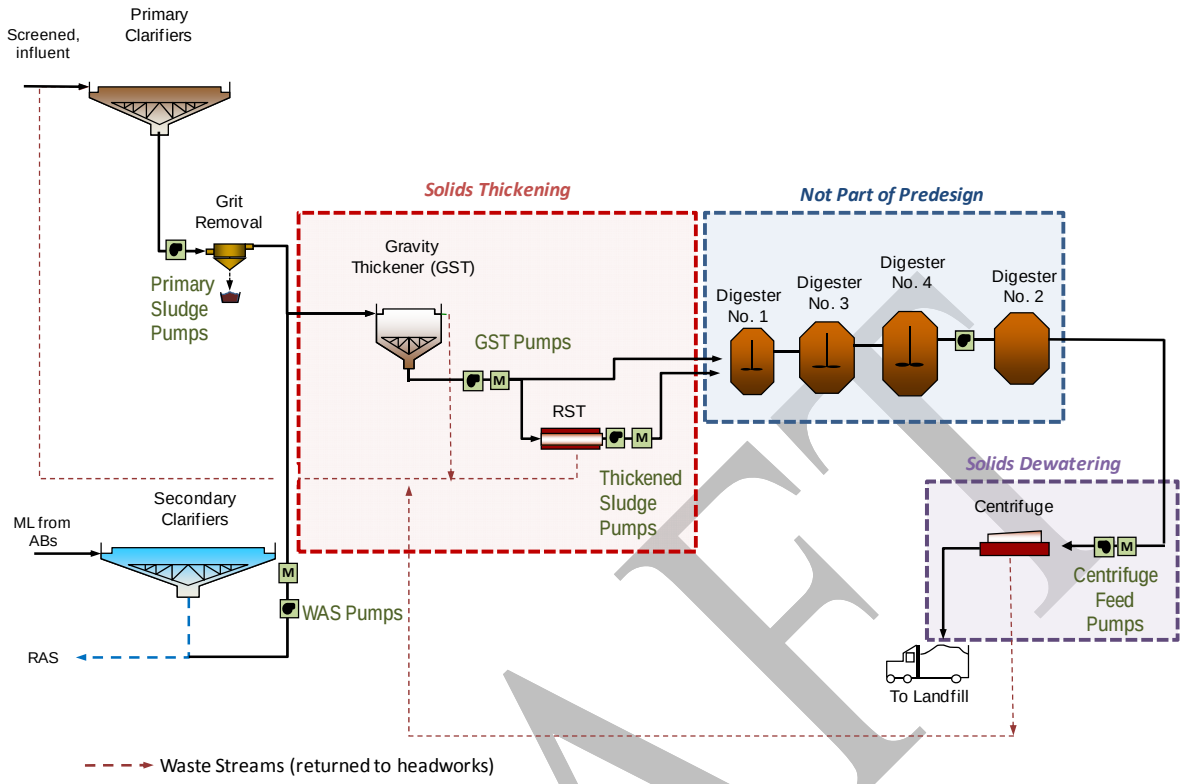

Figure 13-2. Existing Solids Process Flow Schematic

Table 13-1. Existing Solids Handling Equipment

Unit Process	Units	Design Criteria
Gravity Sludge Thickener		
Diameter	ft	30
Depth	ft	12
Volume	gallons	63,000
Number	ea	1
Hydraulic Loading Rate at Existing Average Annual conditions	gpd/ft^2	340
Solids Loading Rate at Existing Average Annual conditions	lb/ft^2/hr	0.4
Feed Concentration	mg/L	3,000 - 3,500
Thickened Sludge Concentration	% TS	2-2.5%
GST Pumps (pumps from GST to RST/Digesters)		
Type, Manufacturer		Progressive Cavity, Moyno
Number (Duty/Standby)	ea	2
Hydraulic Capacity	gpm	100
Discharge Pressure	ft	58
Motor Size	HP	7.5
Motor Drive		VFD

DRAFT

Unit Process	Units	Design Criteria
Rotary Screen Thickener		
Manufacturer		FKC
Number	ea	1
Hydraulic Capacity	gpm	350
Solids Loading	lb/hr	3,500 – 4,400
Hours of operation	hr/d	6-8
Feed Concentration	mg/L	20,000 – 25,000
Polymer Dose	lbs active polymer/dry ton	10
Thickened Sludge Concentration	% TS	5-9%
Thickened Sludge Pumps (from RST to digester)		
Type, Manufacturer		Progressive Cavity, Moyno
Number		1
Hydraulic Capacity	gpm	140
Discharge Pressure	ft	70
Motor Size	HP	15
Motor Drive		VFD
Anaerobic Digesters		
Volume Digester 1 Digester 2[1] Digester 3 Digester 4[2]	gallons	 147,500 147,500 233,300 356,300
Existing AA Solids Loading (Digesters 1 and 3 in-service)	lb VS/cf/day	0.1
Existing AA Hydraulic Retention time (HRT) (Digesters 1 and 3 in service)	Days	22
Dewatering Feed Pumps (from Digester 2 to dewatering)		
Type, Manufacturer		Progressive Cavity, Moyno
Number		2
Hydraulic Capacity	gpm	100
Discharge Pressure	ft	69
Motor Size	HP	15
Motor Drive		VFD
Dewatering Centrifuge[3]		
Manufacturer, Model		Alfa Laval, Aldec G2-95
Number	ea	1
Hydraulic Capacity	gpm	100 - 200
Hours of operation	hrs/day	4-5
Feed Concentration	mg/L	20,000-25,000
Polymer Dose	lbs active polymer/dry ton	15
Cake % Solids	% TS	18

(1) Digester 2 is not heated and is used as a solids storage tank to feed dewatering. Digester 2 is not included in solids HRT calculations.

(2) Digester 4 is not in service and not included in solids HRT calculations.

(3) Information provided for Alfa Laval unit installed in 2006, which is in good condition and can be reused.

Secondary sludge is typically wasted from return activated sludge (RAS) line from Secondary Clarifiers (see TM 10 for additional details). The waste activated sludge solids content varies but is typically 0.35 percent solids.

Primary sludge is pumped to a vortex grit removal unit. After grit removal, primary sludge is combined with WAS and co-thickened in the GST and then in the RST. The WPCP is staffed one shift per day, 7 days per week and the RST is operated only when staff is onsite. When the RST is online, thickened sludge from the RST is pumped with a single progressive cavity pump to the anaerobic digesters. When the RST is offline, thickened sludge from the GST is pumped with progressive cavity pumps directly to the anaerobic digesters. The RST typically produces a thickened sludge ranging from 8 to 10-percent solids, and the GST typically produces thickened sludge between 2 and 2.5-percent solids. The GST provides reliability and redundancy at the plant because it acts as a storage tank and provides thickening at times when the RST is offline for maintenance. The GST also provides separation of the secondary and primary processes from the solids processes.

Primary and secondary solids are anaerobically digested to produce Class B biosolids, which are dewatered and hauled offsite for beneficial reuse at Keller Landfill in Antioch, CA. There are four anaerobic digesters, but only three digesters are heated (Digesters Nos. 1, 3 and 4). All three digesters are currently online, however Digesters No. 1 and No. 3 are primarily being used at this time. Digester No. 4 is online, but is upset and staff are working to raise the alkalinity of the digester. Digested solids from Digesters Nos. 1, 3 and 4 are pumped to Digester No. 2, which serves a dewatering feed tank. Solids are pumped from Digester No. 2 to the dewatering centrifuges.

A mass balance based on average annual conditions in Figure 13-3 was performed with available data to estimate hydraulic and solids loading rates to thickening, dewatering and digester equipment. The existing annual average loading to the digesters is approximately 0.1-pounds volatile solids per day per cubic foot of digester volume. This is based on only Digesters 1 and 3 being in service. The estimated solids residence time (SRT) is 22 days, which is adequate to meet the Class B holding time requirements. The calculated SRT assumes 90 percent of the volume of Digesters 1 and 3 (10 percent of the digester volume is assumed to be inactive due to grit and rag accumulation). The SRT and volatile solids loading rates will change when Digester 4 is completely brought back online.

Digested sludge is pumped to one of two dewatering centrifuges 4 to 5 days per week. Sludge is blended with polymer and dewatered to approximately 18-percent cake. The centrifuge was installed in 2006, is in good condition and can be reused. The centrifuges are located directly above a truck loadout and dewatered sludge cake directly discharges into a city-owned truck.

DRAFT

Primary Clarification			
	Q	TSS Load	BOD
	mgd	lbs/day	lbs/day
Ex. AA	2.3	5,882	5,487
Ex. MM	3.1	7,673	7,212
AA	1.8	4,784	5,741

Influent			
	Q	TSS Load	BOD
	mgd	lbs/day	lbs/day
Ex. AA	3.4	8,397	8,035
Ex. MM	4.6	9,870	8,800
AA	2.7	7,176	8,611

Primary Clarification #3			
	Q	TSS Load	BOD
	mgd	lbs/day	lbs/day
Ex. AA	1.1	2,941	2,744
Ex. MM	1.5	3,836	3,606
AA	0.9	2,392	2,870

Primary Sludge (1&2)				
	Q	TSS Load	BOD	Solids
	mgd	lbs/day	lbs/day	%
Ex. AA	0.14	3,529	2,195	0.3%
Ex. MM	0.22	4,604	2,885	0.3%
AA	0.10	2,870	2,296	0.4%

Primary Sludge (3)				
	Q	TSS Load	BOD	Solids
	mgd	lbs/day	lbs/day	%
Ex. AA	0.07	1,765	1,097	0.3%
Ex. MM	0.11	2,302	1,442	0.3%
AA	0.05	1,435	1,148	0.4%

TSS Removal Rate	60%
BOD Removal Rate	40%

Volume 1, 3	0.34	MG
Volume 1, 3, 4	0.66	MG

GST Effluent (sludge)				
	Q	TSS Load	BOD	Solids
	mgd	lbs/day	lbs/day	%
Ex. AA	0.05	6,867	5,924	2%
Ex. MM	0.07	8,156	6,959	2%
AA	**0.04**	6,338	5,071	**2%**

Feed to Digester from GST				
	Q	TSS Load	BOD	Solids
	mgd	lbs/day	lbs/day	%
Ex. AA	0.022	2,814	2,322	1.5%
Ex. MM	0.033	4,103	3,357	1.5%
AA	0.009	917	734	2.0%

Digester Effluent/Feed to Dewatering					
	Q	TSS Load	BOD	Solids	To Dewater
	mgd	lbs/day	lbs/day	%	gpm
Ex. AA	0.03	2,747	549	1%	155
Ex. MM	0.04	3,263	653	1%	212
AA	0.02	4,422	884	2.9%	**100**

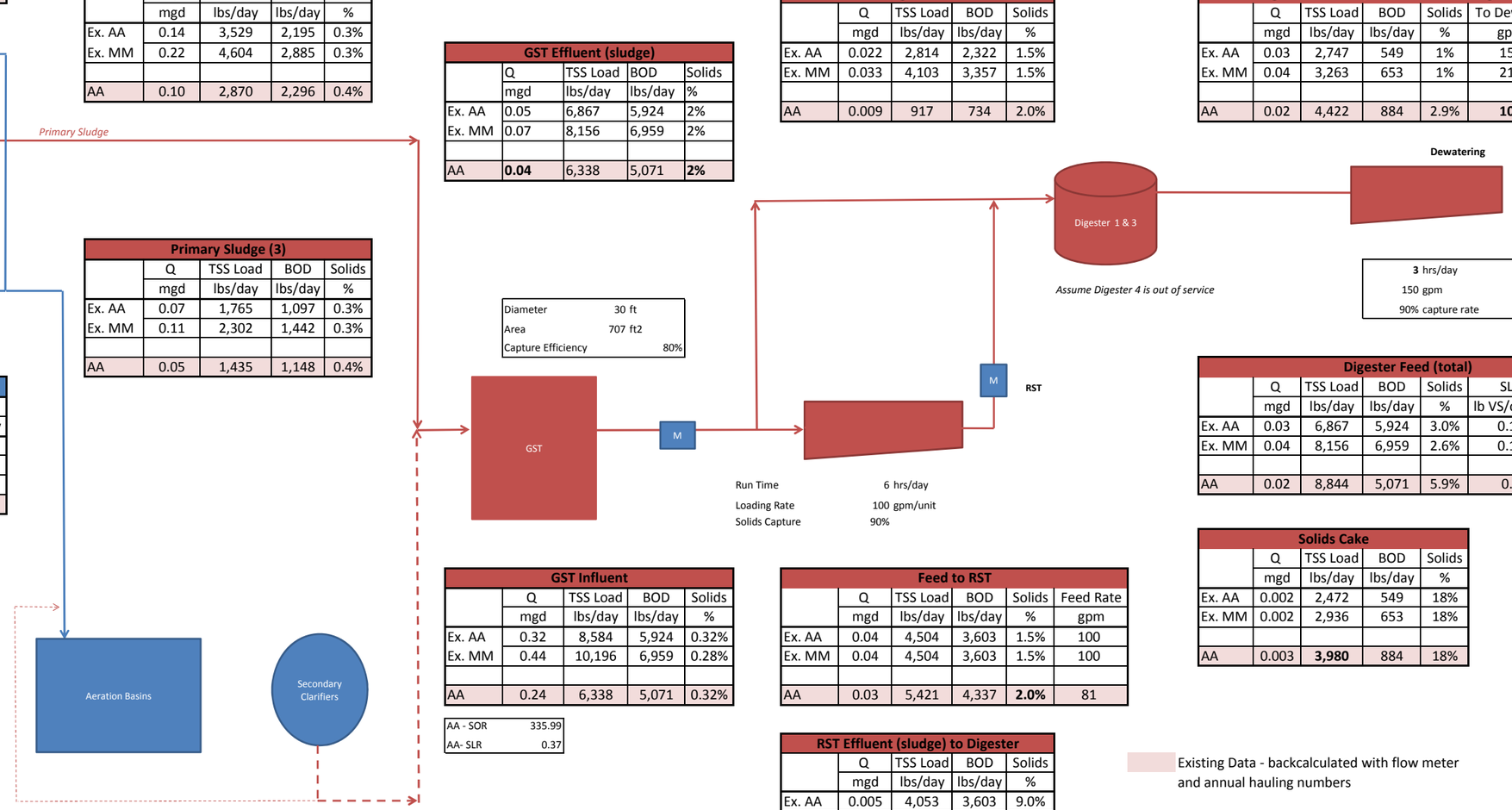

Diameter	30	ft
Area	707	ft2
Capture Efficiency		80%

Run Time	6	hrs/day
Loading Rate	100	gpm/unit
Solids Capture	90%	

3	hrs/day	
150	gpm	
90%	capture rate	

Digester Feed (total)						
	Q	TSS Load	BOD	Solids	SLR	HRT
	mgd	lbs/day	lbs/day	%	lb VS/cf/day	days
Ex. AA	0.03	6,867	5,924	3.0%	0.10	12.3
Ex. MM	0.04	8,156	6,959	2.6%	0.12	9.0
AA	0.02	8,844	5,071	5.9%	0.1	22

Solids Cake				
	Q	TSS Load	BOD	Solids
	mgd	lbs/day	lbs/day	%
Ex. AA	0.002	2,472	549	18%
Ex. MM	0.002	2,936	653	18%
AA	0.003	**3,980**	884	18%

GST Influent				
	Q	TSS Load	BOD	Solids
	mgd	lbs/day	lbs/day	%
Ex. AA	0.32	8,584	5,924	0.32%
Ex. MM	0.44	10,196	6,959	0.28%
AA	0.24	6,338	5,071	0.32%

AA - SOR	335.99
AA- SLR	0.37

Feed to RST					
	Q	TSS Load	BOD	Solids	Feed Rate
	mgd	lbs/day	lbs/day	%	gpm
Ex. AA	0.04	4,504	3,603	1.5%	100
Ex. MM	0.04	4,504	3,603	1.5%	100
AA	0.03	5,421	4,337	**2.0%**	81

RST Effluent (sludge) to Digester				
	Q	TSS Load	BOD	Solids
	mgd	lbs/day	lbs/day	%
Ex. AA	0.005	4,053	3,603	9.0%
Ex. MM	0.005	4,053	3,603	9.0%
AA	**0.007**	4,879	4,337	**9.0%**

Existing Data - backcalculated with flow meter and annual hauling numbers

Inf. to Aeration Basins			
	Q	TSS Load	BOD
	mgd	lbs/day	lbs/day
Ex. AA	3.4	3,529	4,939
Ex. MM	4.6	4,604	6,491
AA	2.7	2,870	5,167

WAS				
	Q	TSS Load	BOD	Solids
	mgd	lbs/day	lbs/day	%
Ex. AA	0.11	3,290	2,632	0.35%
Ex. MM	0.11	3,290	2,632	0.35%
AA	**0.09**	2,627	2,102	**0.35%**

EXISTING SOLIDS MASS

BALANCE FOR AVERAGE ANNUAL CONDITIONS

HDR

Figure 13–3

Solids Processing

Proposed Flow Diagram

As previously noted, the WPCP is staffed one shift per day, 7 days a week. In discussions with the staff, the following criteria were identified to be critical:

- Thickening and dewatering equipment to operate only when the staff are onsite (i.e., one shift per day)
- Provision for a sludge storage tank and/or new GST to provide separation between the secondary process and the solids handling facilities.
- Provide adequate redundancy for solids handling equipment.

Figure 13-4 provides a process flow diagram of the proposed solids handling facilities and Figure 13-5 provides a mass balance for the future maximum month conditions. Based on the solids mass balance, design criteria were established for the unit processes and are included as Table 13-2. Design Criteria for Solids Handling Facilities

Table 13-2. Design Criteria for Solids Handling Facilities

Unit Process	Units	Design Criteria
Thickener		
Numbers		1 duty, 1 standby
Feed Stream		WAS
Feed Concentration	mg/L	5,000 -7,000 mg/L
Operation Duration per Day	hrs/day	6 – 7
Feed Rate	gpm	315 - 350
Thickened Sludge (assumed)	%	5 – 7
Solids Blend Tank		
Volume	gallons	80,000
Proposed Mixing System		Pump mixed
Side Water Depth	ft	15
Dewatering		
Number		1 duty, 1 standby
Feed Stream		Anaerobically digested primary and WAS
Feed Concentration	mg/L	2,000 – 2,500
Operation Duration per Day	hrs/day	4 -7
Feed Rate	gpm	100 – 200
Dewatered Sludge (assumed)	%	18 - 22

DRAFT

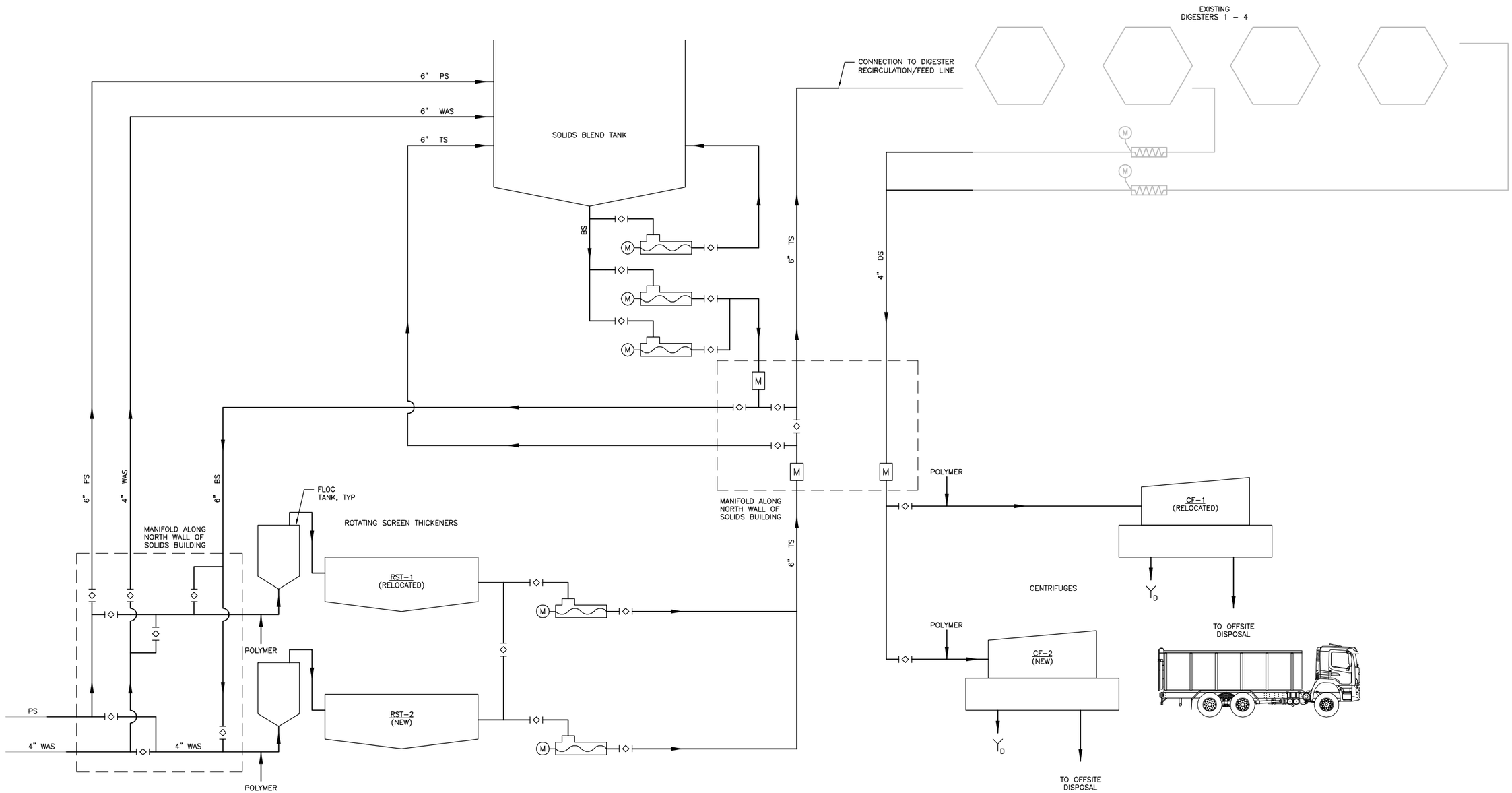

LEGEND

PS	PRIMARY SLUDGE
WAS	WASTE ACTIVATED SLUDGE
BS	BLENDED SLUDGE
TS	THICKENED SLUDGE
DS	DIGESTED SLUDGE

PINOLE/HERCULES WPCP PROJECT

SOLIDS HANDLING FACILITY
FLOW DIAGRAM

0 1" 2"

Figure 13–4

C:\pwworking\sac\d0427215\Figure 13-4.dwg
02-28-13 RSNIDER 14:12:02

Primary Clarification	Q	TSS Load	BOD	SOR
	mgd	lbs/day	lbs/day	gpd/sf
MM	4.0	8860	8227	1258

TSS Removal Rate 60%
BOD Removal Rate 35%

Volume 1, 3 0.3 MG
Volume 1, 3, 4 0.7 MG

Primary Sludge (1&2)	Q	TSS Load	BOD	Solids	Pumping Rate
	mgd	lbs/day	lbs/day	%	gpm
MM	0.042	5316	2879	1.5%	177

Volume 2 0.1475 MG

Digester 2 - Holding Tank Influent/Feed to Dewatering	Q	TSS Load	BOD	Solids	Avg to Dewater	Hold time	Peak to Dewater	SLR - Avg	SLR Peak
	mgd	lbs/day	lbs/day	%	gpm	days	gpm	lbs/hr/m	lbs/hr/m
MM	0.05	7293	5368	1.7%	166.7	3.0	333	1459	2917

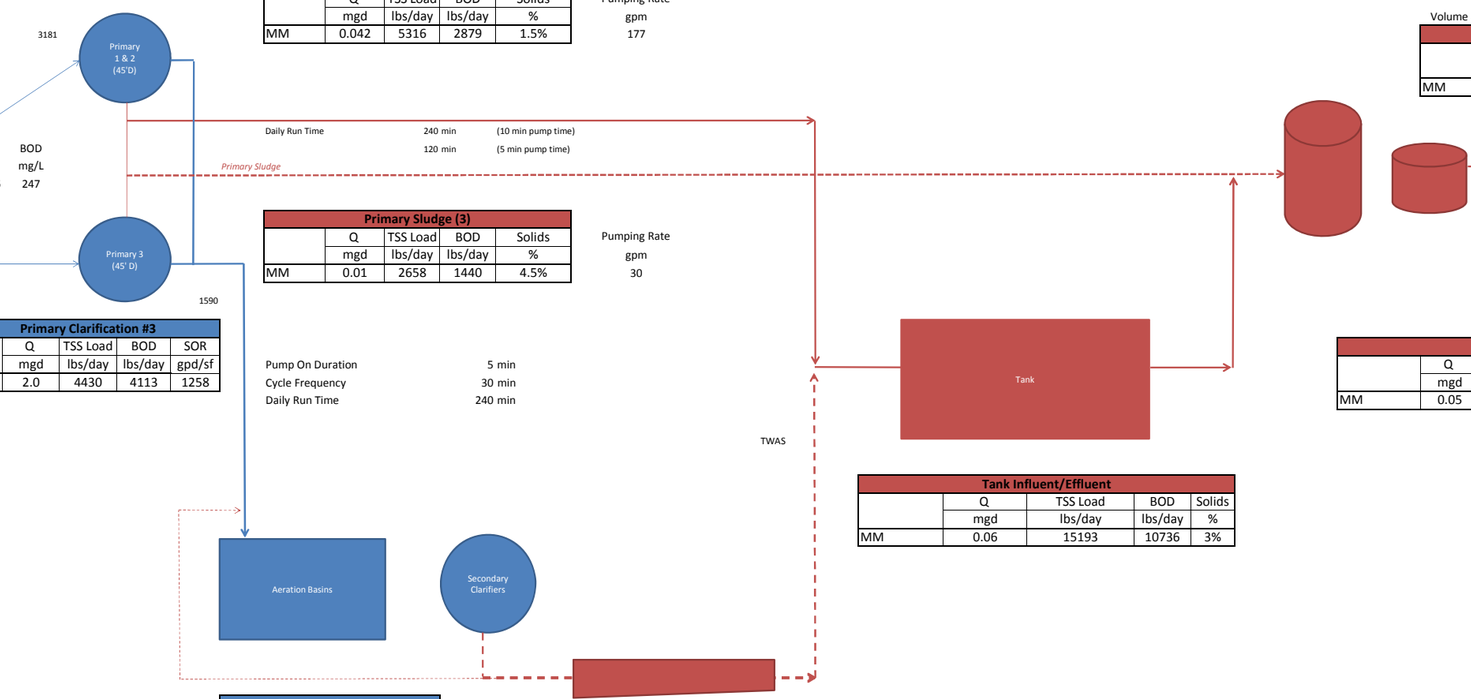

Influent	Q	TSS Load	BOD	TSS	BOD
	mgd	lbs/day	lbs/day	mg/L	mg/L
MM	6.0	13290	12340	266	247

Primary Sludge (3)	Q	TSS Load	BOD	Solids	Pumping Rate
	mgd	lbs/day	lbs/day	%	gpm
MM	0.01	2658	1440	4.5%	30

Primary Clarification #3	Q	TSS Load	BOD	SOR
	mgd	lbs/day	lbs/day	gpd/sf
MM	2.0	4430	4113	1258

Pump On Duration 5 min
Cycle Frequency 30 min
Daily Run Time 240 min

Digester Effluent/Transfer to Digester 2	Q	TSS Load	BOD	Solids	To Dewater
	mgd	lbs/day	lbs/day	%	gpm
MM	0.05	7293	5368	1.7%	167

Feed to Digester	Q	TSS Load	BOD	Solids	HRT	SLR
	mgd	lbs/day	lbs/day	%	days	lbs VS/cf/day
MM	0.05	15193	10736	3.6%	13.3	0.23

Tank Influent/Effluent	Q	TSS Load	BOD	Solids
	mgd	lbs/day	lbs/day	%
MM	0.06	15193	10736	3%

Dewatering

Run Time 5 hrs/day
Capture Rate 90%

Solids Cake	Q	TSS Load	BOD	Solids
	mgd	lbs/day	lbs/day	%
MM	0.004	6563	4831	18%

Inf. to Aeration Basins	Q	TSS Load	BOD
	mgd	lbs/day	lbs/day
MM	6.0	5316	8021

Run Time 6.5 hrs/day
Loading Rate 200 gpm/unit
Capture Rate 90%

Y=	biomass produced/substrate consumed
Yex	0.6
Yfuture	0.7
Yrevised	0.8
WAS	5631.6 lbs/day
TSS	7039.5

WAS	Q	TSS Load	BOD	Solids
	mgd	lbs/day	lbs/day	%
MM	0.13	8021	6417	0.75%

Thickened Sludge	Q thickened sludge	TSS Load	BOD	Solids	Feed Rate(1)	Feed Rate(2)	SLR to thickener
	mgd	lbs/day	lbs/day	%	gpm	gpm	lbs/hr
MM	0.01	7219	6417	6.0%	329	109	1234

(1) Assuming 24 hrs is processed over 6 hrs.
(2) Assuming 18 hrs is processed over 6 hrs.

Thickend Sludge Pump	
MM	37 gpm

Holding Tank Size	Flow in	Withdrawal	Duration	Dead V	Total V	SWD	Diameter
	mgd		hrs	% of total	gallons	ft	ft
MM	0.06	0.05	24	10%	71114	15	28

Feed to Digester
gpm
44

PROJECTED MASS BALANCE

FOR MAXIMUM MONTH CONDITIONS

Figure 13–5

The solids holding tank was sized to receive primary sludge from Primary Clarifiers Nos. 1 and No. 2 over a 24 hr period and to receive WAS from the secondary clarifiers for a 2 hour period. Because Primary Clarifier No. 3 will be constructed as new, it is assumed that primary sludge can be thickened in the clarifier to 4-percent solids. Primary sludge from Primary Clarifier No. 3 will therefore under normal conditions bypass the solids holding tank. WAS will be directed to the solids holding tank and from the tank will be pumped with primary sludge to the sludge thickening system.

Sludge thickening and dewatering equipment was sized to accommodate processing solids over 6 hours per day, with one unit online. It was assumed that during maximum day (MD) flows two units could be brought online to process solids and/or a single unit could be operated for longer, in an emergency situation. Alternative thickening and dewatering equipment were reviewed and are further described in the subsequent sections.

Sludge Thickening Design Criteria and Alternatives

Design considerations for the sludge thickening system will include the following components:

- Design Criteria
- Design Alternatives

Design Criteria

The design criteria in Table 13-3 has been developed to select and size thickening equipment. Solids mass balance calculations for all flow conditions are provided in Appendix A.

Table 13-3. Sludge Thickening Design Criteria

Flow	Feed Rate to Thickening [gpm]	Solids to Dewatering [lb/d]	Thickened Solids [% Solids]	Operation [# of units online]
Average Dry Weather	315	6,825	6.0	1
Maximum Month	315	6,825	6.0	1
Maximum Day	350	7,040	6.0	1

Design Alternatives

There are numerous technologies available for sludge thickening. Rotary screen thickeners (RSTs) and gravity belt thickeners (GBTs) were evaluated.

Rotary Screen Thickeners

The WPCP currently uses a RST that consist of a rotary drum, internal screw, and a drive. A cylindrical screen inside the rotary drum captures solid as it rotates, allowing water to pass through the screen. An auger located inside the screen transports the remaining solids from the feed end of the drum to the outlet. A flocculation tank is upstream of the drum. Polymer is

DRAFT

added upstream of the RST and flocculator tank. Cutsheets of rotary screen thickeners are in Appendix B. The design criteria for the rotary screen thickener is summarized in Table 13-4.

Table 13-4. Rotary Screen Thickener Design Criteria

RST Design Criteria	Units	Value
Hydraulic Loading Rate	gpm	350
Inlet Solids	%	1
Solids Loading Rate (Over 6 hours)	lb/d	10,510
Washwater delivery rate (intermittent)	gpm	40-50 gpm
Washwater delivery pressure	psig	30-40
Energy Use	hp	6.5
Polymer Use(6-16 lb/DT TS)	lb/d	30-85
% Solids produced	% TS	5-7
Capture Rate	% SS	80-90

lb/DT TS - pounds per dry ton total solids

Advantages and disadvantages of RSTs are shown in Table 13-5.

Table 13-5. Advantages and Disadvantages of Rotary Screen Thickeners

Advantages	Disadvantages
Small footprint	Performance is dependent on polymer dosage and requires more operator attention
Few moving parts resulting in minimal maintenance	Uses more washwater
Operational experience at the plant	
Enclosed unit minimizes odors	
Reuse the existing unit	
Lower capital cost than GBT	

Gravity Belt Thickener

Sludge is fed into a GBT over a porous serpentine belt that acts as a filter allowing water to drain while capturing solids on the belt. Polymer is mixed with the sludge prior to entering the GBT to increase the solids capture. Cutsheets of the GBT are in Appendix B. The design criteria for the gravity belt thickener is summarized in Table 13-6.

Table 13-6. Gravity Belt Thickener Design Criteria

GBT Design Criteria (1M Unit)	Units	Value
Hydraulic Loading Rate	gpm	350
Inlet Solids	%	1
Solids Loading Rate (over 6 hours)	lb/d	10,510
Belt Speed	fpm	80
Washwater delivery rate (intermittent)	gpm	22
Washwater delivery pressure	psig	85
Air Requirement (intermittent)	cfm	2.0

GBT Design Criteria (1M Unit)	Units	Value
Air delivery pressure	psig	90
Energy Use	hp	3
Polymer Use(6-18 lb/DT TS)	lb/hr	5-15
Minimum Thickened Sludge Solids	% TS	6
Minimum Solids Capture Rate	% SS	80-90

Advantages and disadvantages of gravity belt thickeners are shown in Table 13-7.

Table 13-7. Advantages and Disadvantages of Gravity Belt Thickeners

Advantages	Disadvantages
Proven technology	Fine tuning of performance results in higher O&M costs
Low energy use	Requires proper equipment and platform support
	Containment required under unit to contain spills
	Requires odor mitigation with an exhaust hood or additional building ventilation
	High cost
	New technology at WPCP
	Requires auxiliary air

A summary comparing the two thickening alternatives is shown in Table 13-8.

Table 13-8. Thickening Technology Comparison

Parameter	Rotary Screen Thickener	Belt Filter Press
Equipment Footprint	22 ft x 13 ft	25 ft x 5 ft plus 3 ft diameter flocculator tank
Noise Level	<85 dB	<85 dB)
Conveyance System	Drum and screw	Belts
Lifting System	Monorail	None
Ease of Operation	Moderate Operator Attention	Moderate operator attention, but fine tuning of unit required
Working Atmosphere and Odor Control	Dry with Minimum Odors	Odorous, wet, humid, and uncomfortable
Polymer Dosage	6 to 16 b/DT TS	6 to 18 lb/DT TS
Average Cake Solids	5-7%	6 - 8%
Maintenance	Relatively low. Parts can be replaced on site	Moderate. Belts to be replaced every few years
Washwater Requirement	50 gpm at 40 psi	22 gpm at 85 psi
Total Power Required (1)	Approximately 27 hp	Approximately 15 hp

(1) Includes auxiliary power for air and water.

dB - decibels.

Sludge Dewatering Design Criteria and Alternatives

Design considerations for the sludge dewatering system will include the following components:

- Design Criteria
- Design Alternatives

Design Criteria

The design criteria in Table 13-9 have been developed to select and size dewatering equipment. Solids mass balance calculations for all flow conditions can be found in Appendix A.

Table 13-9. Sludge Dewatering Design Criteria

Flow	Feed Rate to Dewatering [gpm]	Solids to Dewatering [lb/d]	Cake Solids [% Solids]	Operation [# of units online]
ADWF	119	6,000	18.0	1
MM	145	6,330	18.0	1
MD	167	7,300	18.0	1

Design Alternatives

Centrifuges

The WPCP currently utilizes centrifuges. A centrifuge operates by allowing sludge to enter at a stationary tube where it is fed into a rotating bowl that contains an accelerating inlet rotor. The rotor rotates at speeds up to 3,400 revolutions per minute creating centrifugal forces that push solids to the outer wall of the bowl. A conveyor rotates in the opposite direction of the rotor collecting the solids and discharging them to a chute at the end of the bowl. The liquid that is separated from the solids is called centrate. During the process of separation, the liquid is conveyed to the opposite end of the equipment from the solids. Cutsheets of the centrifuge are in Appendix B. The design criteria for the centrifuge is summarized in Table 13-10.

Table 13-10. Centrifuge Design Criteria

Centrifuge Design Criteria	Units	Value
Number (Duty/Standby)	ea	1/1
Hydraulic Loading Rate	gpm	167
Solids Loading Rate	lb/d	7,300
Operating Speed	RPM	3,400
Washwater Delivery Rate	gpm	40 (at startup and shutdown)
Washwater Delivery Pressure	psig	50
Main Drive Size	hp	75
Back Drive Size	hp	30
Polymer Use	lb/DT TS	6-16
Average Dewatered Sludge Solids	%	20
Minimum Solids Capture Rate	%	95-99

DRAFT

Advantages and disadvantages of centrifuges are shown in Table 13-11.

Table 13-11. Advantages and Disadvantages of Centrifuges

Advantages	Disadvantages
Highest solids output concentration	High noise
Relatively compact footprint	High energy cost
Low odors due to enclosed design	High operator attention required. Cannot be run unattended overnight
Proven technology for anaerobic sludge	Long downtime for major parts replacement
For varying feed quality of sludge, is capable of making small adjustments to achieve the desired cake solids fairly quickly.	
Lowest net present worth cost	
Operational experience at the plant	
Reuse existing unit	

Belt Filter Press

The belt filter press (BFP) uses two or more serpentine belts and a series of rollers to mechanically filter and separate moisture from stabilized solids. The BFP is open to the room. Some installations have hoods that can be located over the top of the units to collect foul air. Cutsheets of the belt filter press are in Appendix B. The design criteria for the belt filter press is summarized in Table 13-12.

Table 13-12. Belt Filter Press Design Criteria

Belt Filter Press Design Criteria (1.2-1.5M)	Units	Value
Number (Duty/Standby)	each	1/1
Hydraulic Loading Rate	gpm	167
Solids Loading Rate	lb/d	7,300
Washwater Delivery Rate (intermittent)	gpm	44
Washwater Delivery Pressure	psig	85
Air Requirement	cfm	2-3
Air Delivery Pressure	psig	90
Energy Use	hp	2
Polymer Use	lb/ton TS	15-25 active
Average Dewatered Sludge Solids	%	20
Minimum Solids Capture rate	%	95

Advantages and disadvantages of belt filter presses are shown in Table 13-13.

Table 13-13. Advantages and Disadvantages of Belt Filter Press

Advantages	Disadvantages
Ease of operation	Relatively large footprint.
First year maintenance cost is low	Containment under required the unit for drainage
Low downtime when belt replacement required	Lag in performance after operator adjustments
Low energy use	New technology at WPCP
	More operator attention needed if the feed solids vary in concentration or organic matter
	Odors must be mitigated with an exhaust hood or building ventilation
	Highest net present worth cost
	Area is more humid due to the open system
	High washwater use

Screw Press

Sludge is pumped to a flocculation system and it then flows by gravity to an influent headbox at the top of the screw press. The screw is rotated by a chain drive. Within the screw press, sludge is dewatered as it is pushed continuously the inlet section to the discharge end. The screw is surrounded by a screen, which filters out the water and discharges it to the bottom filtrate section. Pressure increases towards the discharge end of the screw press. Wash water is used intermittently on a timer to clean solids build-up on the screen holes. The screw is continuously cleaned using brushes along the flight edge.

The equipment is made of stainless steel, and the base is typically made of painted carbon steel. A variable frequency drive (VFD) is typically recommended to adjust the speed of the screw. The screw press can be installed on concrete pillars to allow removal of cake from the bottom discharge box. A lower sump can be used, in combination, to remove the cake with a conveying mechanism. Alternatively, the sludge can drop directly into a discharge box. Polymer used for coagulation of suspended solids is typically injected into an injection ring just before the flocculation tank. The two main manufacturers of screw presses are FKC and Huber. Cutsheets of the screw press are in Appendix B. The design criteria for the screw press is summarized in Table 13-14.

DRAFT

Table 13-14. Screw Press Design Criteria

Screw Press Design Criteria	Units	Value
Number (Duty/Standby)	ea	1/1
Hydraulic Loading Rate	gpm	167
Solids Loading Rate	lb/d	7,300
Washwater Delivery Rate	gpm	145
Washwater Delivery Pressure	psig	40
Energy Use	hp	6.5
Polymer Use	lb DT/d	10-25
Average Dewatered Sludge Solids	% TS	22
Minimum Solids Capture Rate	%SS	90-95

lb DT/d - pounds dry ton per day

Advantages and disadvantages of screw presses are shown in Table 13-15.

Table 13-15. Advantages and Disadvantages of Screw Press

Advantages	Disadvantages
Low energy use	High polymer use
Low maintenance	New technology at plant
Long screw life	Heavy unit when full of sludge
Minimal operator attention, mainly for polymer dose adjustment	High net present value
Can run continuously	The two manufacturer's performance is dependent on the type and amount of polymer supplied
	Long lead time for equipment, particularly FKC

The differences between the two manufacturers are shown in Table 13-16.

Table 13-16. Screw Press Manufacturer Comparison

Configuration	FKC	Huber
Orientation	Horizontal	Inclined
Flocculation System	Tank and mixer	Reactor standpipe and no mixing
Filter Screen	1/8-inch punctured holes. Secondary screen at end of press	Wedge wire with 0.01-inch spacing
	Screw tapers in diameter along length of press. Pressure increases towards the discharge end	Screening basket is wider at front of press and tapers towards the end. Dewatered sludge is pushed through the space between the basket and cone.
Drive System	Cyclo reducer and a chain drive. Speed range 0.05 to 1.5 rpm	Slow-turning gear reducer. Speed range 2 to 3 rpm
Discharge Point	Low	High

A summary comparing the three dewatering technologies is shown in Table 13-17.

Table 13-17. Dewatering Technology Comparison

Parameter	Centrifuge	Belt Filter Press	Screw Press
Sludge Holding Tank and Grinding	Required	Required	Required
Equipment Footprint	11.5 ft x 4 ft	22 ft x 13 ft	25 ft x 5 ft plus 3' diameter flocculator tank
Noise Level	<85 dB	<85 dB	<85 dB
Conveyance System	Rotary drum	Belt	Screw Conveyor
Lifting System	Monorail	None	Monorail
Ease of Operation	Simple. Requires either differential or torque adjustment: (1) Auto-Mode - Adjusts differential (2) Manual-Mode - Adjusts torque	Simple but multiple parameters to monitor and adjust	Simple. Automatic control system.
Working Atmosphere and Odor Control	Dry with minimum odors.	Odorous, wet, humid, and uncomfortable.	Dry with minimum odors.
Polymer Dosage	6 to 16 lb/DT TS	15 to 25 lb/DT TS	10 to 25 lb/DT TS
Average Cake Solids	20%	20%	22%
Maintenance1	Major maintenance items can be replaced.	Relatively simple, but belt replacement is costly.	Low. Greasing bearings. Minimal wear on bearings. Screw to last 20+ years.
Wash Water Requirement	40 gpm flush cycle during startup and shutdown (1 hour) or 2,400 gal/day 5 hp pump	44 gpm during belt filter press operation (8 hours) or 21,000 gal/day 20 hp pump	133 gpm for 24 minutes/24-hours, 12 gpm for 72 minutes/24-hour period or 4,060 gal/day
Total Power Required(1)	Approximately 105 hp	Approximately 23 hp	Approximately 6.5 hp

(1) Includes auxiliary power for air and water.

Recommended Project

It is recommended to utilize the same thickening and dewatering technology that is currently in place at the WPCP. One new RST and one new centrifuge are proposed to be installed at a new Sludge Handling Facility along with the relocated existing RST and centrifuge.

All sludge thickening and dewatering will take place in the new Solids Handling Building. The ground level of the building will be separated into the thickening room and the solids truck loadout. As shown in Figure 13-6, the ground level of the thickening room will house one new and one relocated rotary screen thickeners and flocculation tanks, two new thickened sludge pumps, polymer feed units for both the thickening and dewatering processes and control panels for the thickeners.

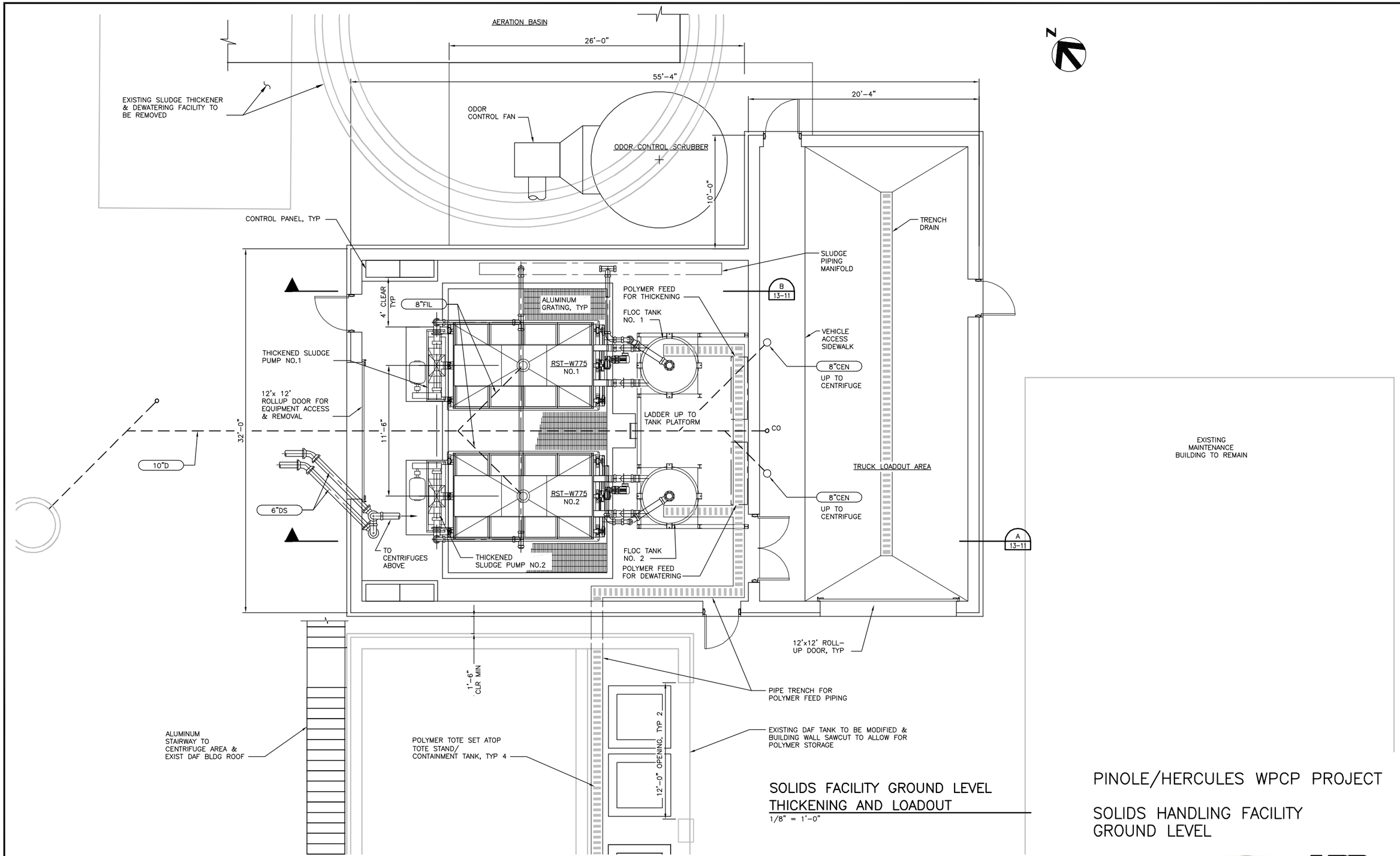

SOLIDS FACILITY GROUND LEVEL
THICKENING AND LOADOUT
1/8" = 1'-0"

PINOLE/HERCULES WPCP PROJECT

SOLIDS HANDLING FACILITY
GROUND LEVEL

Figure 13-6

C:\pwworking\sac\d0427215\Figure 13-6.dwg
02-28-13 RENDER 14:19:42

A magnetic flow meter will be provided on the discharge piping from the rotary screen thickeners to meter flow to the sludge holding tank or directly to the digesters. The truck loadout room will house the polymer totes for use at the thickening and dewatering units.

As shown in Figure 13-7, the upper level of the building will house the two centrifuges and associated control panels. The upper level will have a sloped metal canopy roof and no walls. A new stairway will be located adjacent to the existing polymer storage building to allow access to the upper level dewatering area as shown in Figure 13-8. As shown in Figure 13-4, a magnetic flow meter will be provided on the feed pipe to the centrifuges. Dewatered solids will fall into a chute from each centrifuge straight into the truck below as shown in Figure 13-9. The truck will need to be moved in order to distribute the dewatered solids. Centrate from the bottom of the centrifuge will be piped to the plant drain.

Bridge cranes or monorails are recommended in the thickening and dewatering areas to facilitate removal of heavy equipment parts. A monorail in the dewatering area will allow any heavy parts to be removed and lowered to a truck on the ground. Aluminum platforms around the rotary screw thickeners will allow full access to raised equipment.

A new sludge storage tank will be constructed in place of the City Public Works Building and will store and blend primary sludge and thickened WAS. Flow from the tank will be pumped to the digesters with progressive cavity pumps. The tank will have a capacity of 80,000 gallons, will be constructed of partially buried cast-in-place concrete, and will not have a cover. The sidewall depth will be approximately 15-feet and the bottom floor of the tank will be sloped to a center sump to aid in tank dewatering and to draw off at the point of the thickest solids concentration. A single progressive cavity mixing pump will be dedicated to the sludge storage tank and will have a common suction with the draw-off to the digester feed pumps, discharging back to the tank.

Two progressive cavity pumps will be located adjacent to the tank and will pump thickened sludge to the digesters. Valves will be provided to allow the sludge to be pumped back to the rotary screen thickeners for additional thickening. A magnetic flow meter will be provided on the discharge piping from the pumps to meter blended flow to the digesters.

Site Constraints Analysis

The existing grit removal and sludge dewatering facilities and gravity sludge thickener are located in the area where the existing aeration basins are to be expanded. (See TM 8.) The new Solids Building is to be located north of the polymer storage building, east of the existing dewatering facility, and in place of the existing caustic tank as shown in Figure 13-10. The new sludge storage tank is proposed to be located east of the existing gravity sludge thickener and in place of existing City Public Works Building. The two new facilities will be constructed while the existing facilities remain in operation.

DRAFT

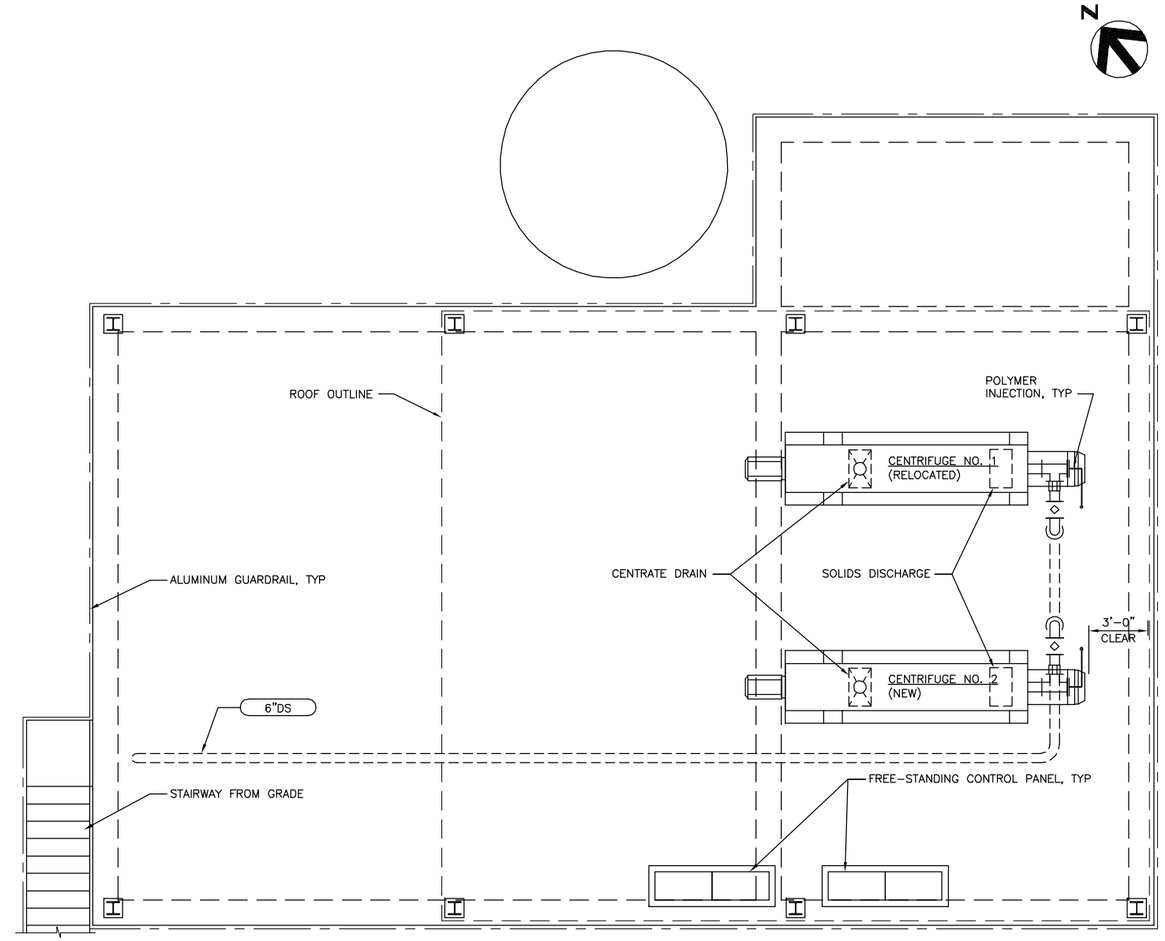

UPPER LEVEL – CENTRIFUGE

1/8" = 1'-0"

PINOLE/HERCULES WPCP PROJECT

SOLIDS HANDLING FACILITY
UPPER LEVEL

HDR

Figure 13–7

G:\pwworking\sac\d0427215\Figure 13-7.dwg
02-28-13 RSNIDER 14:22:11

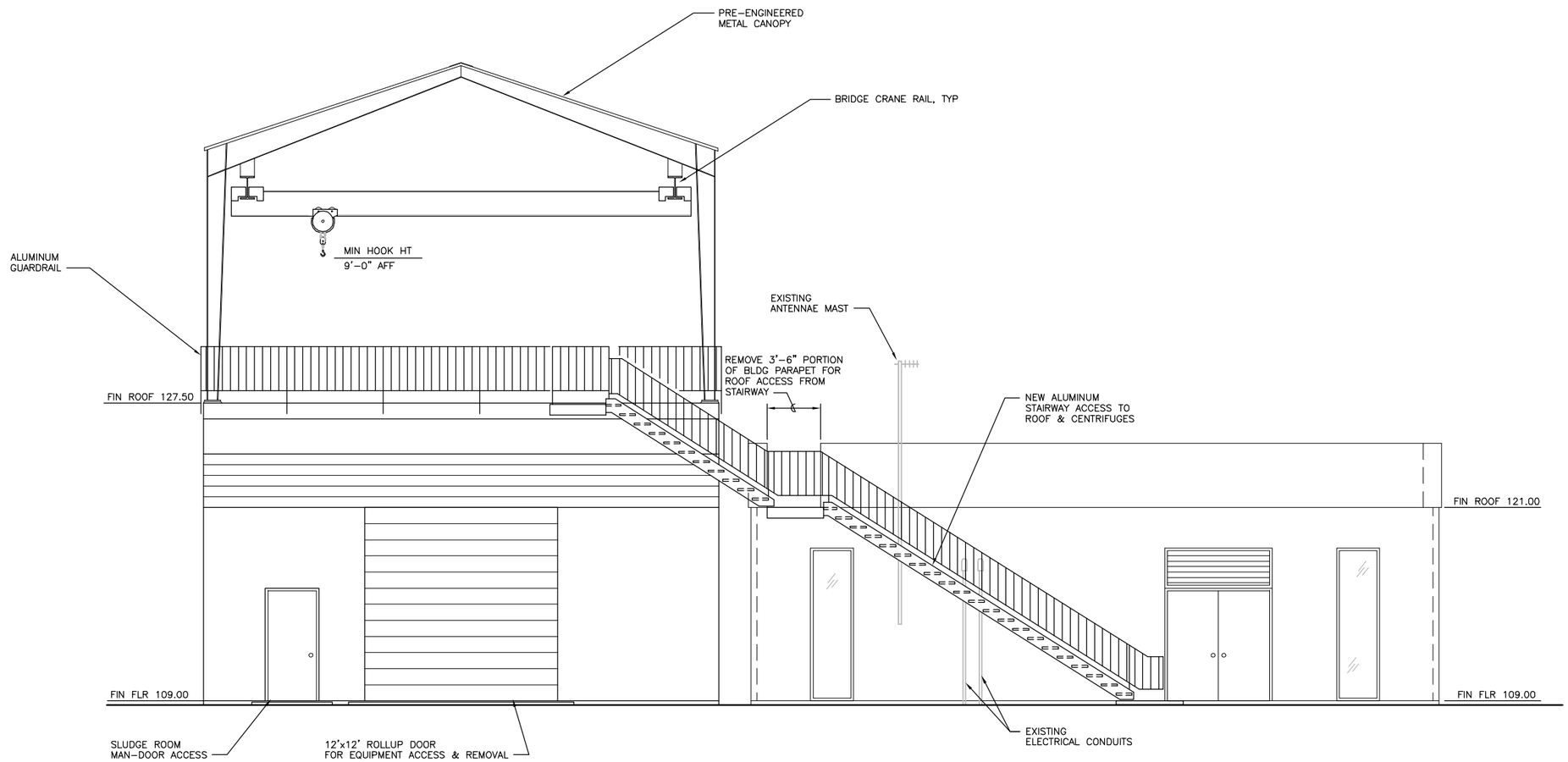

SOLIDS HANDLING FACILITY – SOUTHWEST ELEVATION

1/8" = 1'-0"

C:\pwworking\sea\d0427215\Figure 13-8.dwg
02-28-13 RSNIDER 15:02:49

PINOLE/HERCULES WPCP PROJECT

SOLIDS HANDLING FACILITY
SOUTHWEST FACILITY ELEVATION
WITH POYMER STORAGE BUILDING

Figure 13-8

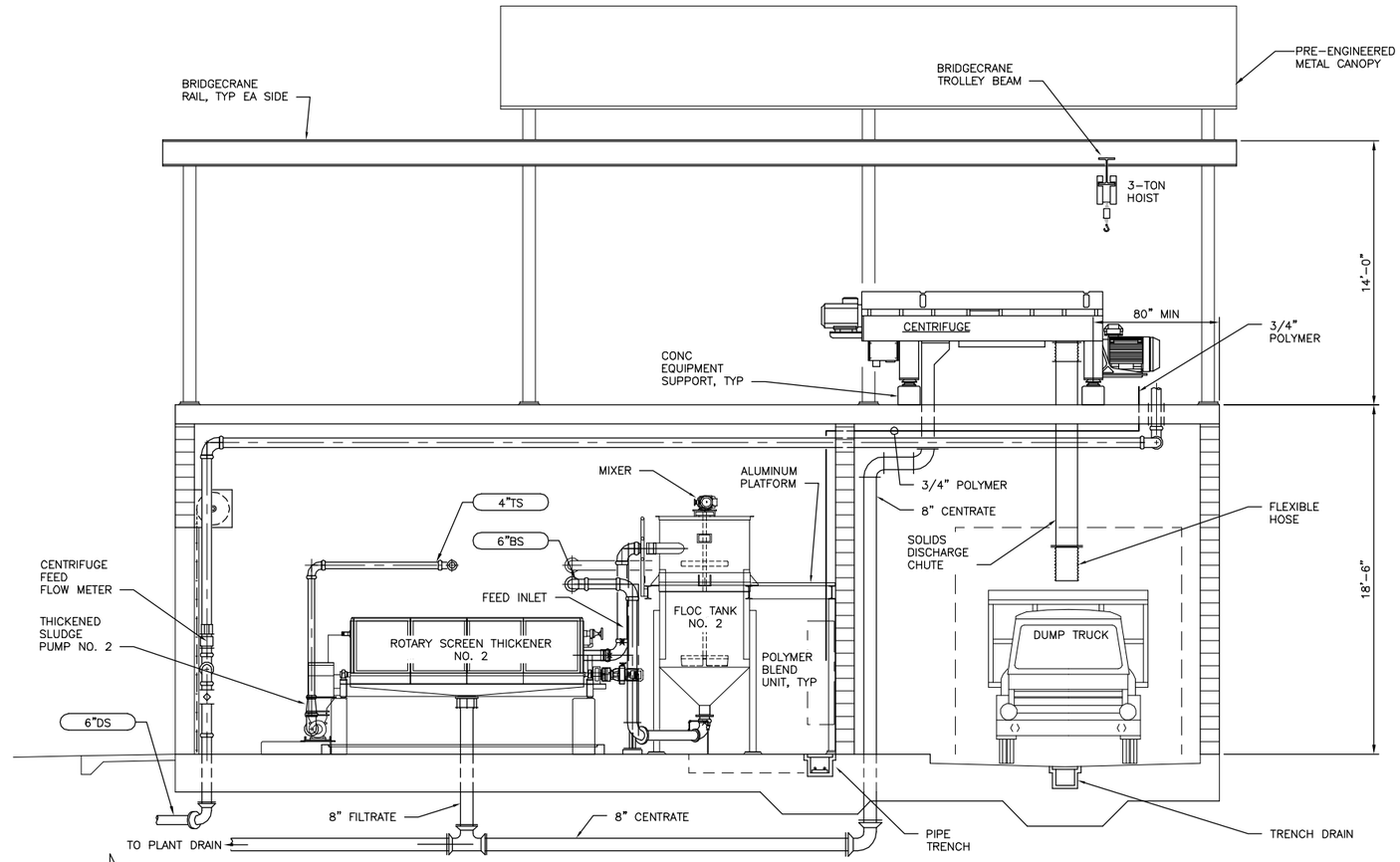

SECTION
1/8" = 1'-0"
A
13-8

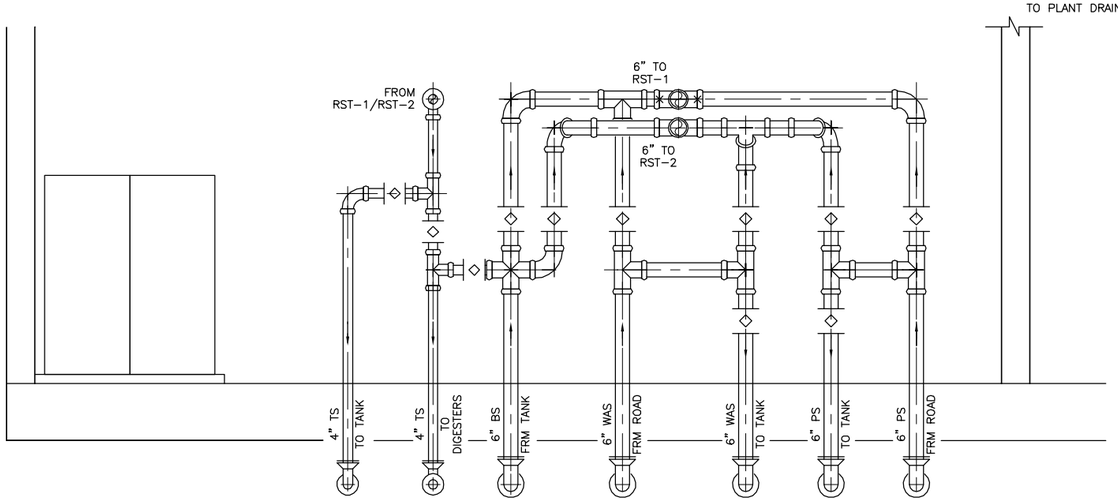

SECTION
3/16" = 1'-0"
B
13-8

0 1" 2"

PINOLE/HERCULES WPCP PROJECT

SOLIDS HANDLING FACILITY
CROSS SECTION

Figure 13-9

C:\pwworking\sac\d0427215\Figure 13-9.dwg
02-28-13 RSNIDER 14:31:27

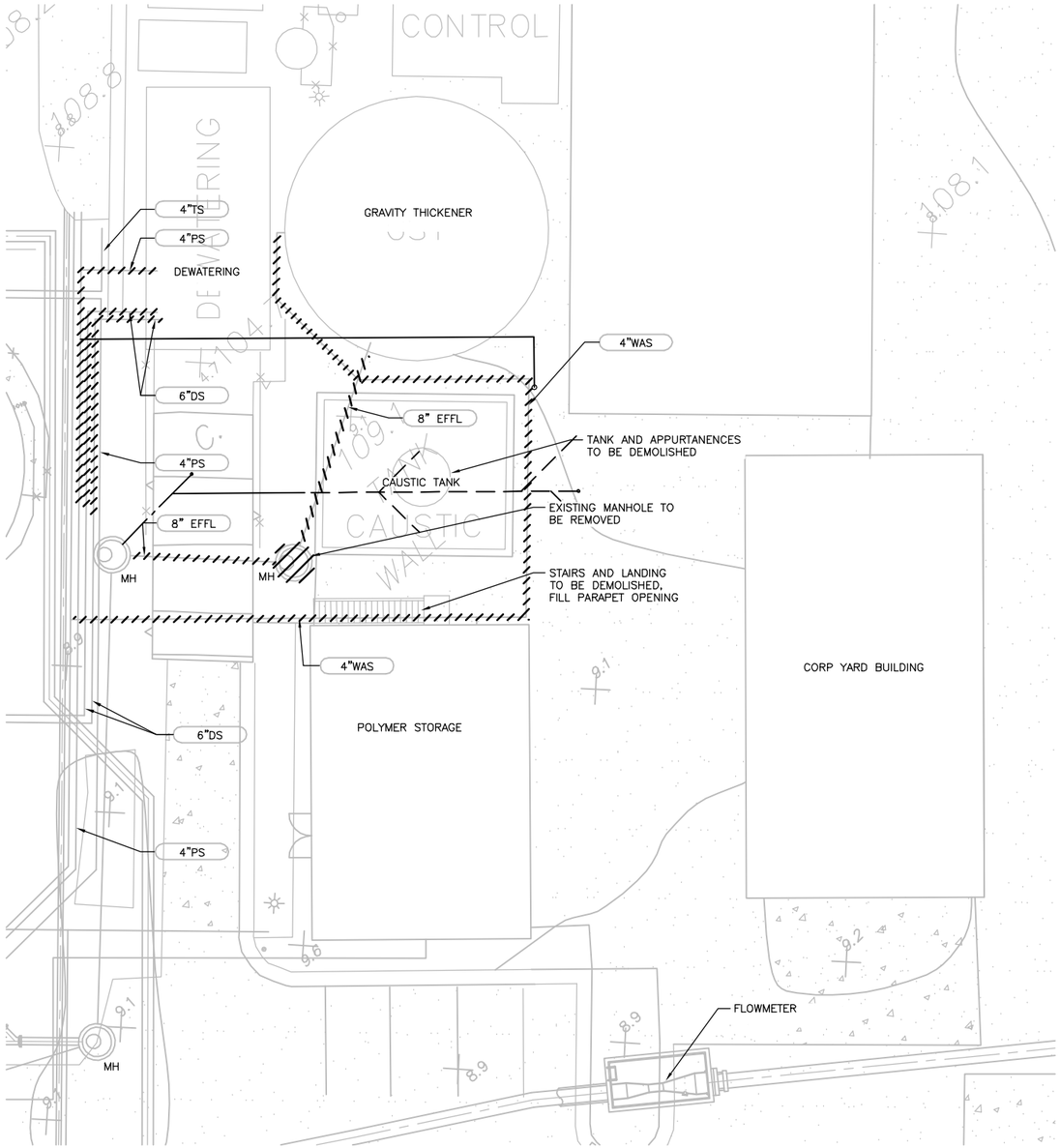

EXISTING SITE LAYOUT/DEMOLITION
1" = 20'

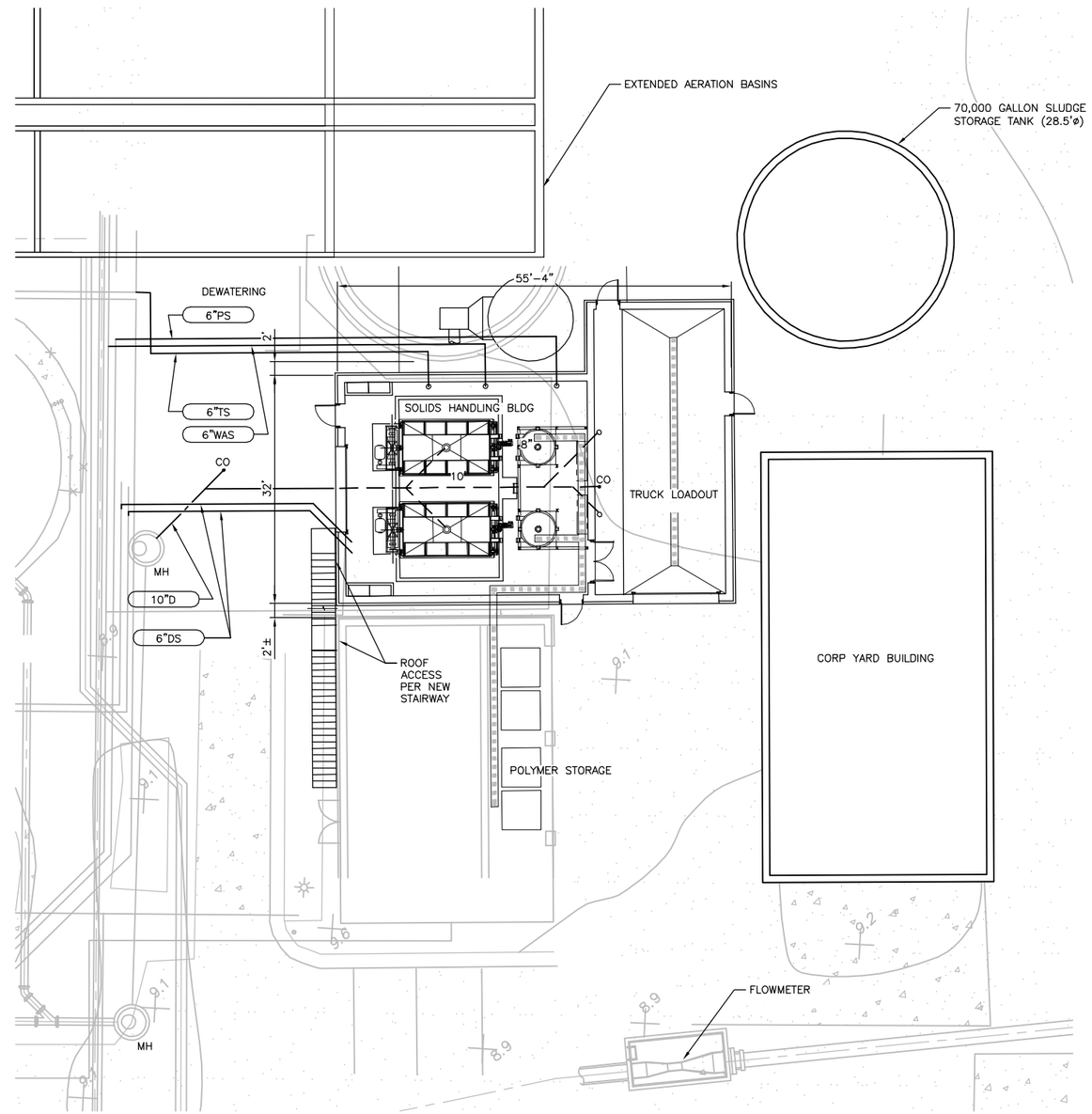

SOLIDS HANDLING FACILITY SITE LAYOUT
1" = 20'

PINOLE/HERCULES WPCP PROJECT

SITE PLAN
SOLIDS HANDLING FACILITY

FIGURE 13-10

C:\pwworking\sac\d0427215\Figure 13-10.dwg
02-28-13 NSNIDER 14:34:51

Sludge trucks will access a new truck loadout from the south of the Solids Building as shown in Figure 13-10. A single rollup door large enough to fit the city's truck will be provided in the south wall of the building. Bollards will line the front of the truck loadout area to protect the building walls. The city's truck will need to backup and pull straight out of the loadout area.

Tie-ins to the primary sludge, WAS, and thickened sludge will be required while the existing facilities remain in service. Short, temporary shutdowns of the system will be required to install the connections. Once connections are made, manual valves on the branches to the new equipment can be isolated until the new equipment is operational. The piping to the existing facilities can then be demolished.

Construction Sequencing

The gravity thickener and dewatering equipment shall remain in operation while the new Solids Handling Building and sludge storage tank is constructed. Once the new centrifuge and rotary screen thickener are operational and the below-grade piping is installed up to the point of connection to the existing piping, a temporary shutdown of the existing system will occur for tie-in to the existing piping. After the tie-ins and testing of the pipelines, the sludge can be processed with the new equipment. The existing centrifuge and rotary screen thickener can be relocated to the new building and tied into the piping system. Lastly, the existing gravity thickener and dewatering building shall be demolished so the existing aeration basins can be extended south.

Cost Estimate

Cost estimates are derived for three sets of thickening and dewatering equipment:

- Option 1 - RST and Centrifuge
- Option 2 - GBT and BFP
- Option 3 - RST and Screw Press

The estimated construction cost summary for the proposed dewatering Options by CSI Division is provided in Table 13-18. The 2012 construction cost of the recommended Option 1 is approximately $3,938,000.

Detailed cost estimates are provided in Appendix C.

DRAFT

Table 13-18. Cost Summary for Solids Handling Options

CSI Division	Option 1	Option 2	Option 3
1 - General Requirements	$385,5000	$336,500	$361,400
2 - Sitework	$180,745	$180,745	$180,745
3 - Concrete	$356,700	$356,700	$356,700
4 - Masonry	$92,500	$92,500	$92,500
5 - Metals	$69,550	$69,550	$69,550
6 - Rough Carpentry And Plastics	$100,000	$100,000	$100,000
7 - Thermal & Moisture Protection	$15,000	$15,000	$15,000
8 - Doors & Windows	$15,500	$15,500	$15,500
9 - Finishes & Protective Coatings	$15,000	$15,000	$15,000
10 - Specialties	$12,000	$12,000	$12,000
11 - Equipment	$1,273,300	$1,077,000	$1,214,800
12 - Furnishings	$0	$0	$0
13 - Instrumentation	$262,660	$223,400	$250,960
14 - Conveying Systems	$40,000	$40,000	$40,000
15 - Mechanical	$264,450	$264,450	$264,450
16 - Electrical	$262,660	$223,400	$250,960
Subtotal Construction Cost	$3,345,565	$3,021,745	$3,239,565
Construction Contingency (20%)	$592,013	$537,049	$575,633
Total Construction Cost (2012 dollars)	$3,938,000	$3,559,000	$3,816,000
Engineering and Administration (25%)	$984,500	$890,000	$954,000
Total Project Cost (2012 dollars)	$4,922,500	$4,449,000	$4,770,000

Conclusions

Solids from Primary Clarifiers No. 1 and No. 2 will be blended with WAS in a sludge storage tank. Sludge will be thickened to approximately 5-7-percent solids in RSTs and pumped directly to the existing anaerobic digesters or to the sludge storage tank where it will be blended with primary sludge. Digested sludge will be dewatered to approximately 18-percent in both centrifuges. Dewatered solids will drop into a dump truck to be hauled to a landfill.

All pumps, except for the sludge holding tank mixing pump will have redundant units. The thickening equipment and dewatering equipment will also have redundant units.

DRAFT

Appendix A. Solids Mass Balance

DRAFT

Primary Clarification	Q	TSS Load	BOD	SOR
	mgd	lbs/day	lbs/day	gpd/sf
Ex. AA	1.0	2610	2435	314
Ex. MM	0.8	1680	1498	252
ADWF	0.8	2069	2069	252
AA	1.5	3803	3610	472
MM	2.0	4430	4113	629

TSS Removal Rate 60%
BOD Removal Rate 35%

3180.863

Primary 1 & 2 (45'D)

Primary Sludge (1&2)	Q	TSS Load	BOD	Solids	Pumping Rate
	mgd	lbs/day	lbs/day	%	gpm
Ex. AA	0.013	1566	852	1.5%	52
Ex. MM	0.008	1008	524	1.5%	34
ADWF	0.010	1241	724	1.5%	41
AA	0.018	2282	1264	1.5%	76
MM	0.021	2658	1440	1.5%	89

8.694444

Daily Run Time 240 min (10 min pump time) 96
120 min (5 min pump time) 83

Influent	Q	TSS Load	BOD	TSS	BOD
	mgd	lbs/day	lbs/day	mg/L	mg/L
Ex. AA	2.7	7,176	8,035	313	350.4736
Ex. MM	4.7	9870	8800	251.7986	224.5013
ADWF	4.1	10500	10500	310.0968	310.0968
AA	4.5	11410	10830	304.0234	288.5691
MM	6.0	13290	12340	265.5875	246.6027

Primary Sludge

Primary 3 (60' D)

1590.431

Primary Sludge (3)	Q	TSS Load	BOD	Solids	Pumping Rate
	mgd	lbs/day	lbs/day	%	gpm
Ex. AA	0.004	1435	1148	4.5%	16
Ex. MM	0.01	4914	2556	4.5%	55
ADWF	0.01	5059	2951	4.5%	56
AA	0.01	4564	2527	4.5%	51
MM	0.01	5316	2879	4.5%	59

Primary Clarification #3	Q	TSS Load	BOD	SOR
	mgd	lbs/day	lbs/day	gpd/sf
Ex. AA	1.7	4565	4259	1100
Ex. MM	3.9	8190	7302	2452
ADWF	3.3	8431	8431	2050
AA	3.0	7607	7220	1886
MM	4.0	8860	8227	2515

Pump On Duration 5 min
Cycle Frequency 30 min
Daily Run Time 240 min

TWAS

Tank

Tank Influent/Effluent	Q	TSS Load	BOD	Solids
	mgd	lbs/day	lbs/day	%
Ex. AA	0.02	5366	4102	3%
Ex. MM	0.03	11070	7656	4%
ADWF	0.04	12443	9135	4%
AA	0.04	13182	9422	4%
MM	0.05	15193	10736	4%

Aeration Basins

Secondary Clarifiers

Inf. to Aeration Basins	Q	TSS Load	BOD
	mgd	lbs/day	lbs/day
Ex. AA	2.7	4174	4694
Ex. MM	4.7	3948	5720
ADWF	4.1	4200	6825
AA	4.5	4564	7040
MM	6.0	5316	8021

Thickening

Run Time 6 hrs/day
Loading Rate 200 gpm/unit
Capture Rate 90%

Volume 1, 3 0.3 MG
Volume 1, 3, 4 0.7 MG

Volume 2 0.1475 MG

Digester 2 - Holding Tank Influent/Feed to Dewatering	Q	TSS Load	BOD	Solids	Avg to Dewater	hold time	Peak to Dewater	SLR - Avg	SLR Peak
	mgd	lbs/day	lbs/day	%	gpm	days	gpm	lbs/hr/m	lbs/hr/m
Ex. AA	0.02	2576	2051	1.5%	70.2	7.0	140	515	1030
Ex. MM	0.03	5314	3828	2.0%	104.8	4.7	210	1063	2125
ADWF	0.04	5972	4568	2.0%	118.9	4.1	238	1194	2389
AA	0.04	6327	4711	1.8%	143.5	3.4	287	1265	2531
MM	0.05	7293	5368	1.7%	166.7	3.0	333	1459	2917

Digester Effluent/Transfer to Digester 2	Q	TSS Load	BOD	Solids	To Dewater
	mgd	lbs/day	lbs/day	%	gpm
Ex. AA	0.02	2576	2051	1.5%	70
Ex. MM	0.03	5314	3828	2.0%	105
ADWF	0.04	5972	4568	2.0%	119
AA	0.04	6327	4711	1.8%	144
MM	0.05	7293	5368	1.7%	167

Dewatering

Run Time 5 hrs/day
Capture Rate 90%

Feed to Digester	Q	TSS Load	BOD	Solids	HRT	SLR
	mgd	lbs/day	lbs/day	%	days	lbs VS/cf/day
Ex. AA	0.02	5366	4102	3.1%	31.5	0.09
Ex. MM	0.03	11070	7656	4.2%	21.1	0.17
ADWF	0.04	12443	9135	4.2%	18.6	0.20
AA	0.04	13182	9422	3.7%	15.4	0.21
MM	0.05	15193	10736	3.6%	13.3	0.23

Solids Cake	Q	TSS Load	BOD	Solids
	mgd	lbs/day	lbs/day	%
Ex. AA	0.002	2318	1846	18%
Ex. MM	0.003	4782	3445	18%
ADWF	0.004	5375	4111	18%
AA	0.004	5694	4240	18%
MM	0.004	6563	4831	18%

Holding Tank Size	Flow in	Withdrawal	Duration	Dead V	Total V	SWD	Diameter	Feed to Digester
	mgd	mgd	hrs	% of total	gallons	ft	ft	gpm
Ex. AA	0.02	0.02	24	10%	23410	15	16	15
Ex. MM	0.03	0.03	24	10%	34932	15	20	22
ADWF	0.04	0.04	24	10%	39641	15	21	25
AA	0.04	0.04	24	10%	47848	15	23	30
MM	0.05	0.05	24	10%	55375	15	25	35

Y= biomass produced/substrate consumed

Yex 0.6

Yfuture 0.7

Yrevised 0.8
WAS 5631.6 lbs/day
TSS 7039.5

WAS	Q	TSS Load	BOD	Solids
	mgd	lbs/day	lbs/day	%
Ex. AA	0.04	2627	2102	0.75%
Ex. MM	0.09	5720	4576	0.75%
ADWF	0.11	6825	5460	0.75%
AA	0.11	7040	5632	0.75%
MM	0.13	8021	6417	0.75%

Pump Rate at 24 hrs/day 78 gpm
Pump Rate at 6 hrs/day 356 gpm

Thickened Sludge	Q thickened sludge	TSS Load	BOD	Solids	Feed Rate(1)	Feed Rate (2)	SLR to thickener
	mgd	lbs/day	lbs/day	%	gpm	gpm	lbs/hr
Ex. AA	0.005	2364	2102	6.0%	117	39	394
Ex. MM	0.01	5148	4576	6.0%	254	58	858
ADWF	0.01	6143	5460	6.0%	303	66	1024
AA	0.01	6336	5632	6.0%	313	80	1056
MM	0.01	7219	6417	6.0%	356	92	1203

Thickend Sludge Pump
gpm
40.00 20.00

1) Assuming 24 hrs is processed over 6 hours
2) Assuming 18 hrs is processed over 6 hours

Pinole WPCP
Mass Balance (Future)

Appendix B. Manufacture Cutsheets

DRAFT

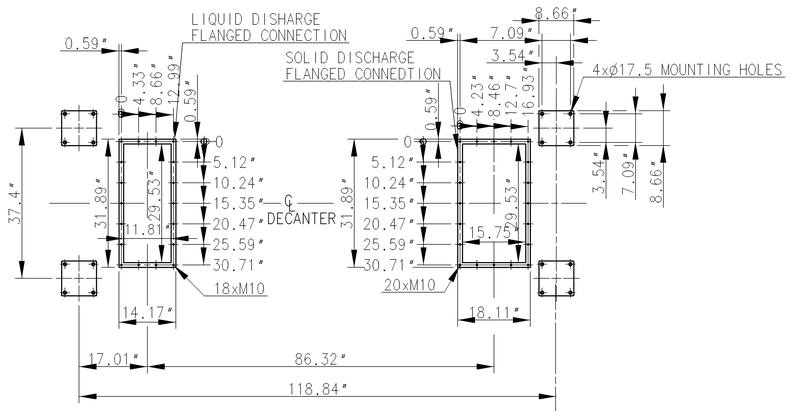

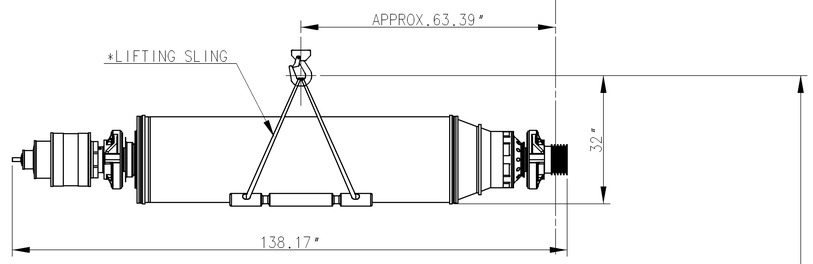

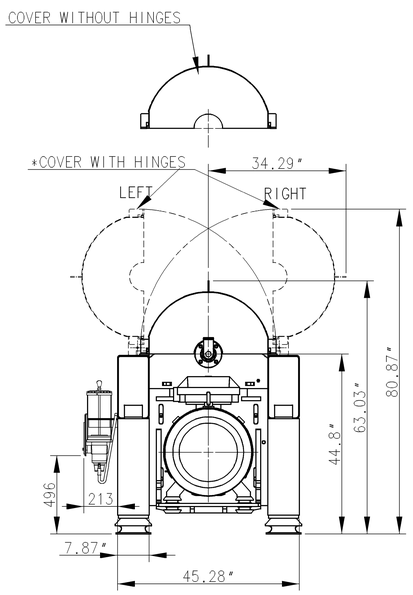

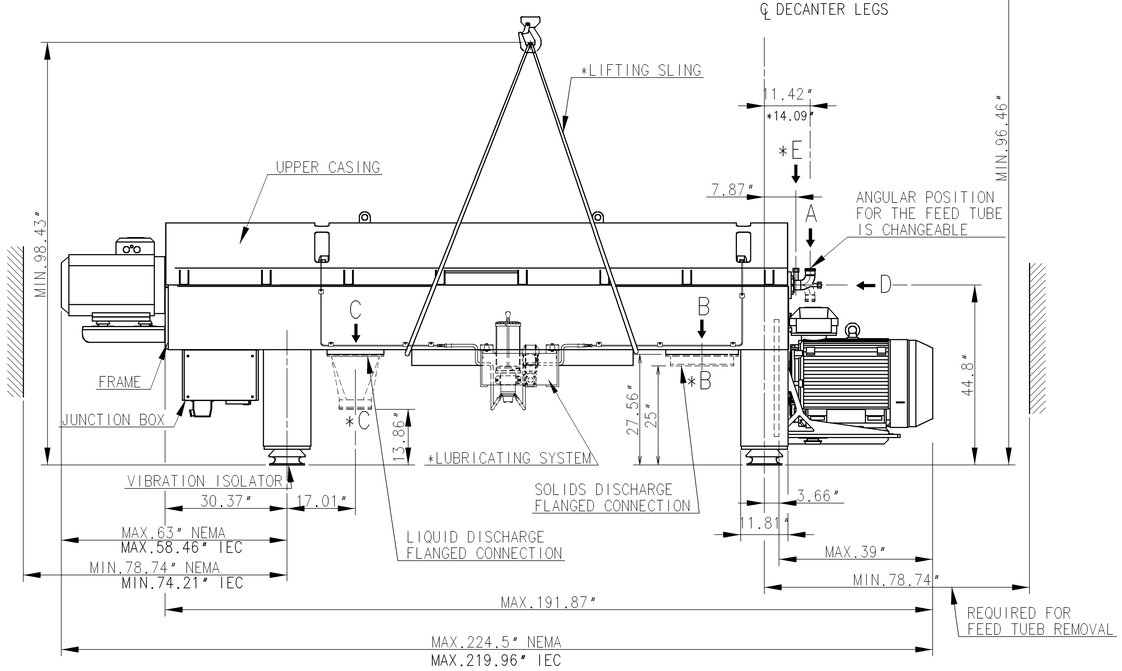

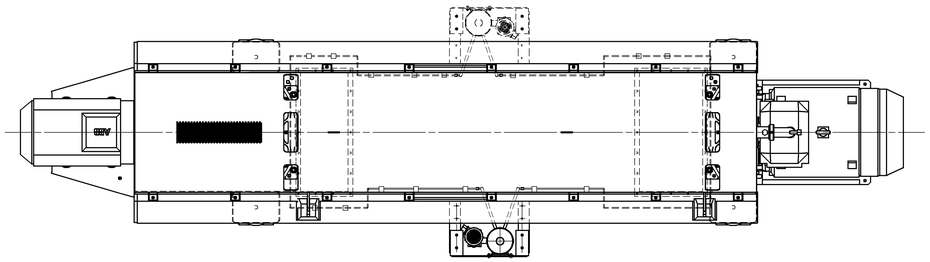

APPROXIMATE WEIGHTS:

TOTAL WEIGHT OF EMPTY DECANTER	4500kg/ 9900lbs
ROTATING ASSY INCL. PILLOW BLOCKS	1600kg/ 3520lbs
CPL.FRAME ASSY EXCL. MAIN MOTOR AND ROT. ASSY..	1500kg/ 3300lbs
MAIN MOTOR	700kg/ 1540lbs
UPPER CASING	200kg/ 440lbs
GEAR BOX	155kg/ 340lbs
MIN.CRANE CAPACITY FOR LIFTING OF ROTATING ASSY:	2000kg/ 4400lbs

LOADING DATA:

DECANTER

1. MAX. STATIC LOAD

A- VERTICAL ..... 50000 N
B- HORISONTAL..... 0 N

2. MAX. DYNAMIC LOAD AT RUN DOWN
(ADD TO STATIC LOAD)

A- VERTICAL ..... ± 30000 N
B- HORIZONTAL..... ± 10000 N

3. MAX. DYNAMIC LOAD AT OPERATING SPEED

A- VERTICAL ..... ±2000 N
B- HORISONTAL..... ±2000 N

ALL LOADS ARE EVENLY DISTRIBUTED ON THE VIBRATION ISOLATORS

CONNECTIONS:

		DIMENSION / TYPE
A	FEED	ø63.5 (2 1/2")HOSE CONNECTION OD 43-46
B	SOLIDS OUTLET	RECTANGULAR FLANGE
*B	SOLIDS OUTLET FUNNEL.....	29.53" x 15.89" TUBE
C	LIQUID OUTLET	RECTANGULAR FLANGE
*C	HEAVY PHASE LIQUID OUTLET FUNNEL	ø8 HOSE CONNECTION
D	POLYMER ADDITION	ISO 228-G 3/4" B CONNECTION
*E	POLYMER ADDITION	ISO 228-G 3/4" B CONNECTION

NOTES:

1- ALL CONNECTIONS MUST BE FLEXIBLE.

2- FOR PROPER VENTING OF DISCHARGE HOPPERS REFER TO THE INSTALLATION DRAWING. IMPROPER VENTING CAN LEAD TO LEAKAGE PROBLEMS.

3- CUSTOMER IS RESPONSIBLE FOR ANCHORING.

4- FOR FURTHER INFORMATION, SEE INSTALLATION DATA MANUAL AND INSTALLATION DRAWING

* OPTIONAL EQUIPMENT

COMPLEMENTARY DRAWING 61242878

MAIN VIEW:
MAX.58.46" IEC REPLACES MAX.56.7" IEC
MIN.74.21" IEC REPLACES MIN.72.44" IEC
MAX.191.87" REPLACES MAX.191.14"
MAX.224.5" NEMA REPLACES MAX.217.01"
MAX.219.96" IEC ADDED.

Rev. No.	Date	Modified By	Appr.
4	100201	SCE	OAN

This document and its contents are the exclusive property of Alfa Laval Copenhagen A/S. It may not be copied and/or transmitted or communicated to a third party, nor used for any other purpose than intended.

This document constitutes a trade secret pertaining to the business of Alfa Laval Copenhagen A/S only to the extent permitted by applicable law.

12kNm DD GEAR BOX

Item	Article No.	Name/Designation	Material

Title: Dimensioned Drawing
ALDEC G2-95

Alfa Laval
Alfa Laval Copenhagen A/S
SØBORG DENMARK

First angle projection	Surface roughness	Scale	Dept.	Date	Design Code
	RAµm	1:12	QKU	081022	
		Format	Drawn	Appr.	Model
		A0	XWG	OAN	N

Document No. 61242879

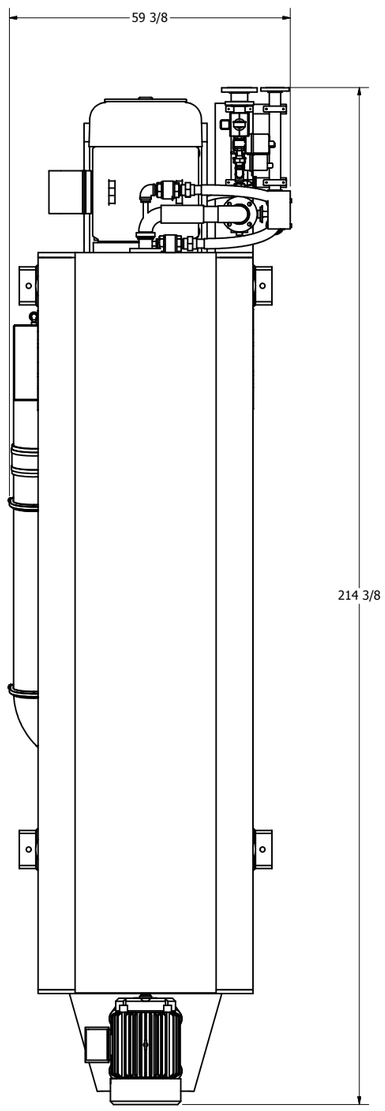

VIEW A-A

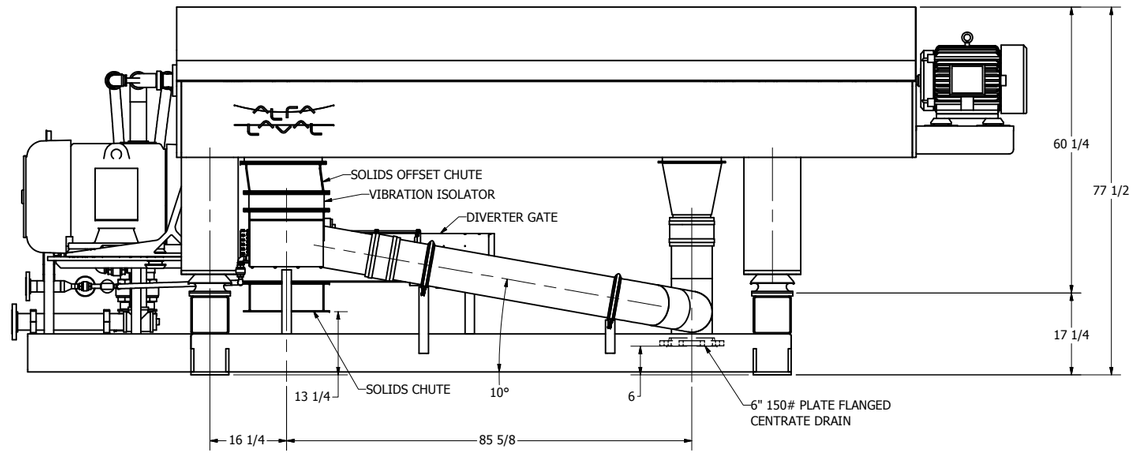

VIEW B-B

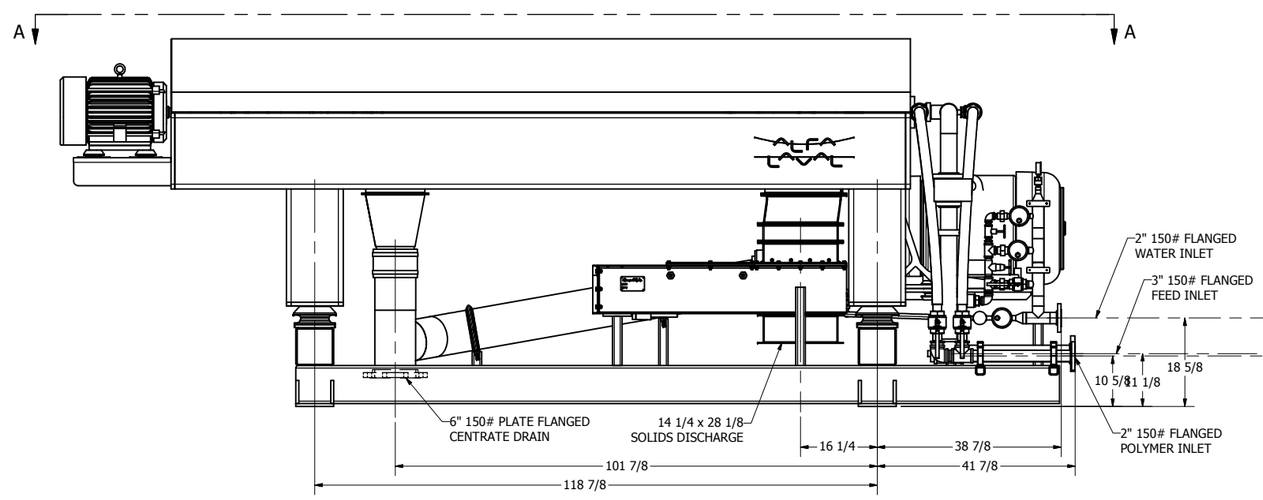

FRONT VIEW

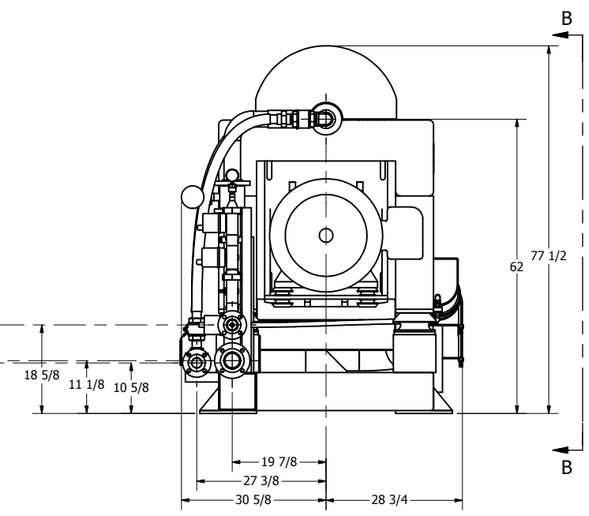

PROCESS END VIEW

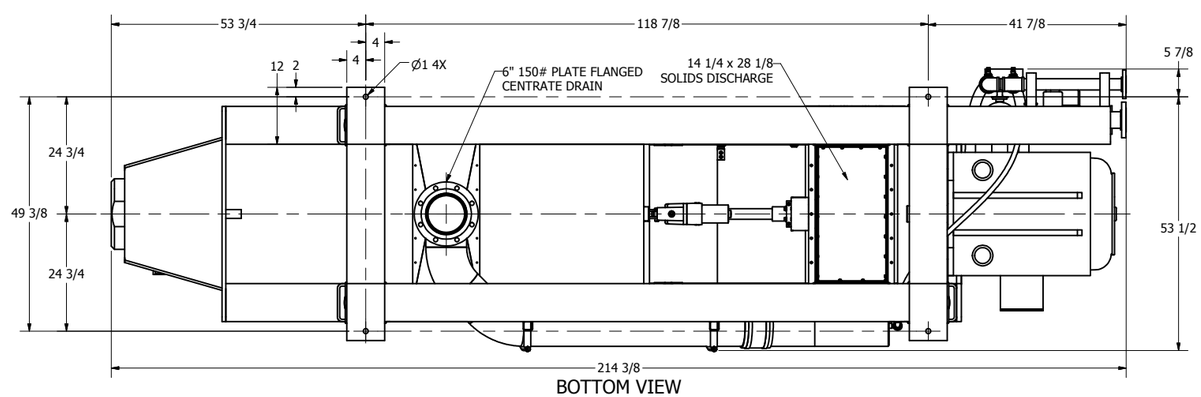

BOTTOM VIEW

DRAWN JHK	7/25/2009	ALFA LAVAL
CHECKED		TITLE
QA		ALDEC G2-95 PLATFORM SKID
MFG		
APPROVED		SIZE D / DWG NO 8729196 / REV 0
		SCALE / SHEET 1 OF 2

THIS PRINT RESPRESENTS DESIGN AND ENGINEERING EFFORTS OF ALFA LAVAL. IT IS LOANED IN CONFIDENCE AND MUST BE RETURNED ON DEMAND
ANY USE DETERMENTAL TO THE INTERESTS OF ALFA LAVAL INC. IS PROHIBITED. IT MUST NOT BE LOANED, COPIED OR REPRODUCED WITHOUT PERMISSION.

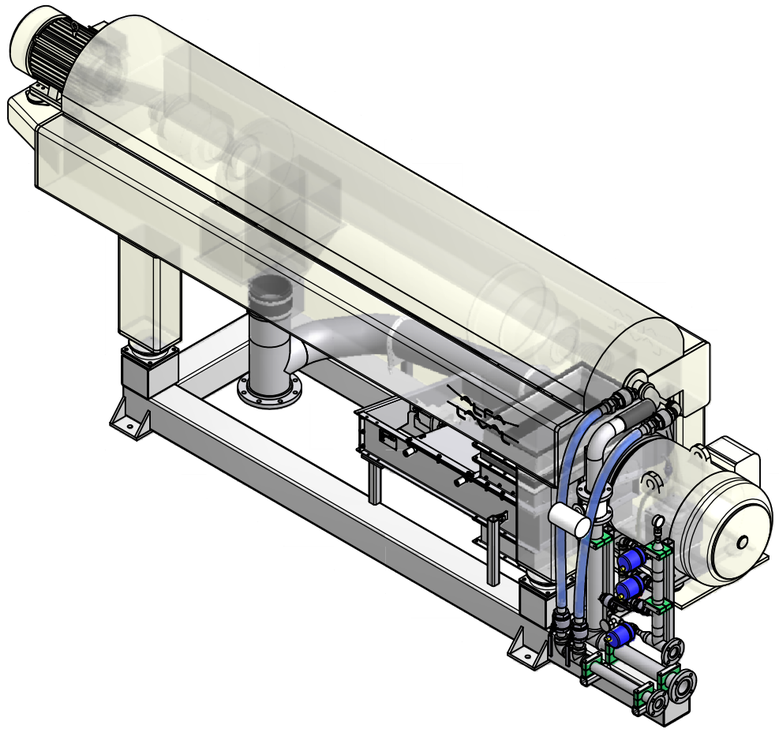

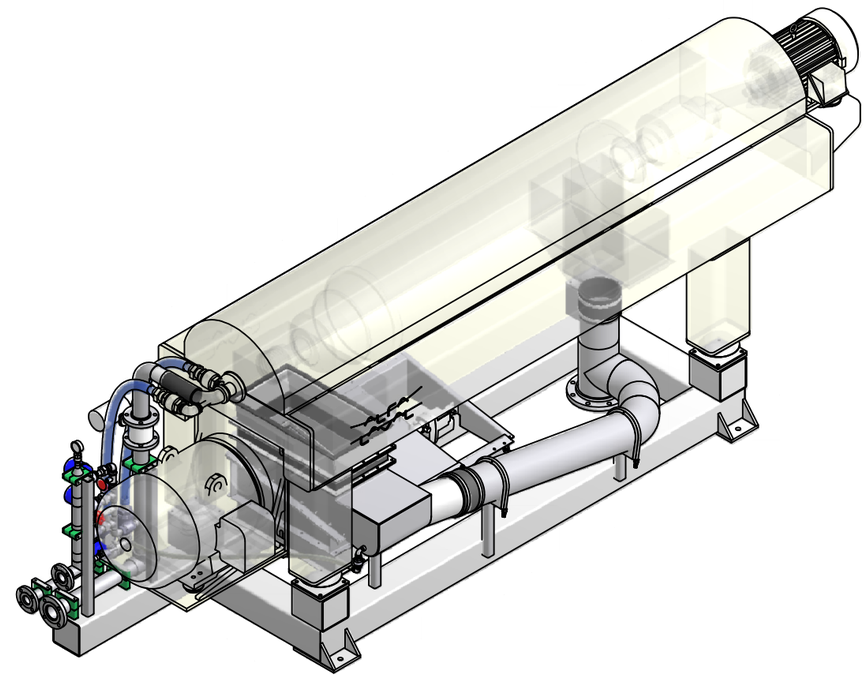

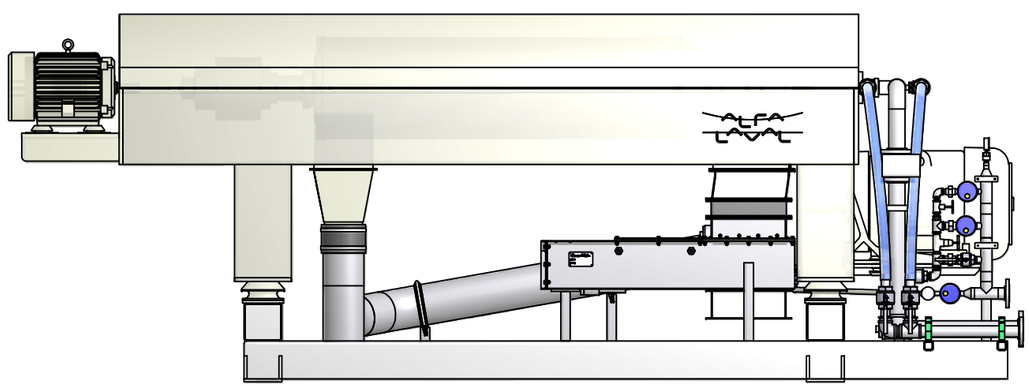

DRAWN JHK	7/25/2009	ALFA LAVAL
CHECKED		TITLE
QA		ALDEC G2-95 PLATFORM SKID
MFG		
APPROVED		
		SIZE D / DWG NO 8729196 / REV 0
		SCALE / SHEET 2 OF 2

THIS PRINT RESPRESENTS DESIGN AND ENGINEERING EFFORTS OF ALFA LAVAL. IT IS LOANED IN CONFIDENCE AND MUST BE RETURNED ON DEMAND
ANY USE DETERMENTAL TO THE INTERESTS OF ALFA LAVAL INC. IS PROHIBITED. IT MUST NOT BE LOANED, COPIED OR REPRODUCED WITHOUT PERMISSION.

HIGH CONSISTENCY
ROTARY SCREEN THICKENER (HC-RST)

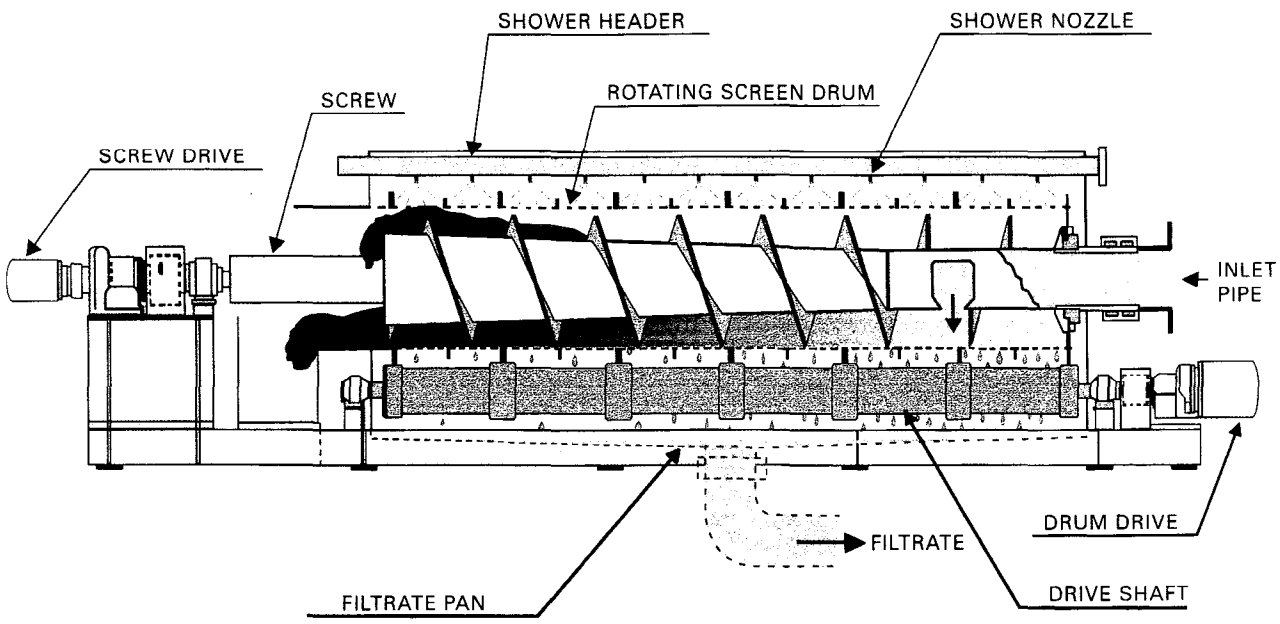

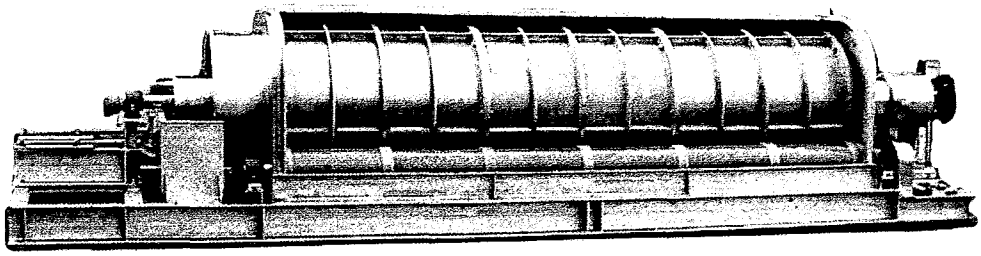

APPLICATIONS

- Prethickening prior to a screw press
- Thickening prior to an aerobic or anaerobic digester
- Thickening for reduced volume for transport
- Screening / Thickening of solids from a liquid/solids stream

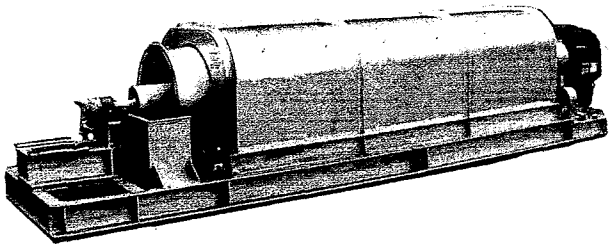

FEATURES

- Increased Outlet Consistency & Capacity
- Independently Driven Counter Rotating Screw
- Stainless Steel Wetted parts
- Heavy Duty Construction
- Can Accept Inlet Consistencies <1%
- Outlet Consistency Typically Ranges 8–20%
- Patented Design
- Reduced Polymer Dosage
- Spray Shower Keep Screens Clean
- Multiple Sizes for Any Flow Rate
- Easy to Install and Operate
- Over 150 units in Operation

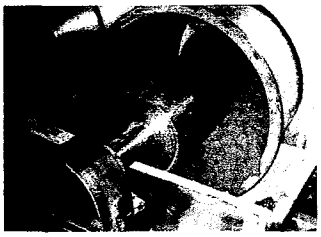

HC-RST plan and elevation view drawing

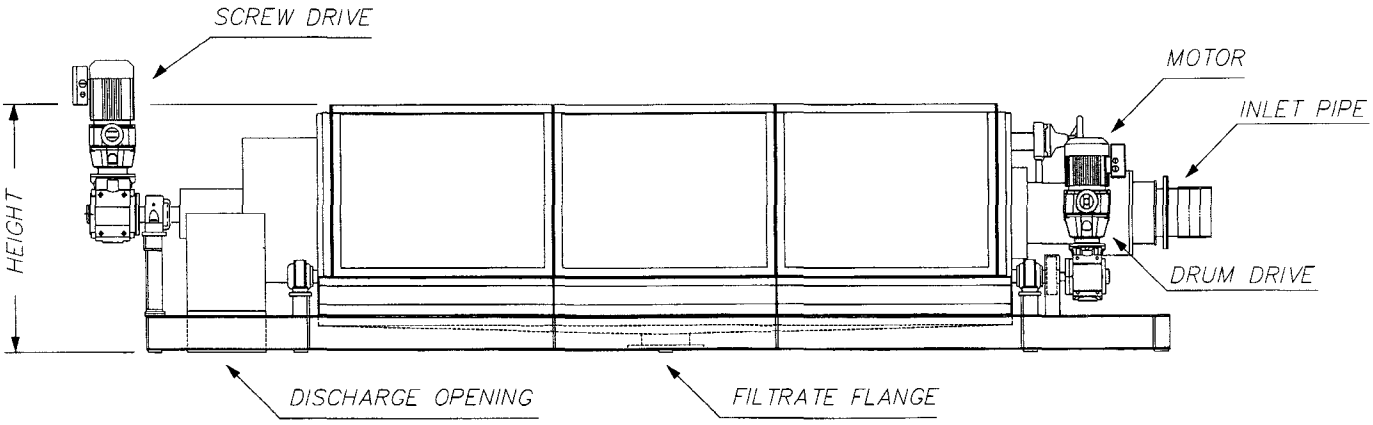

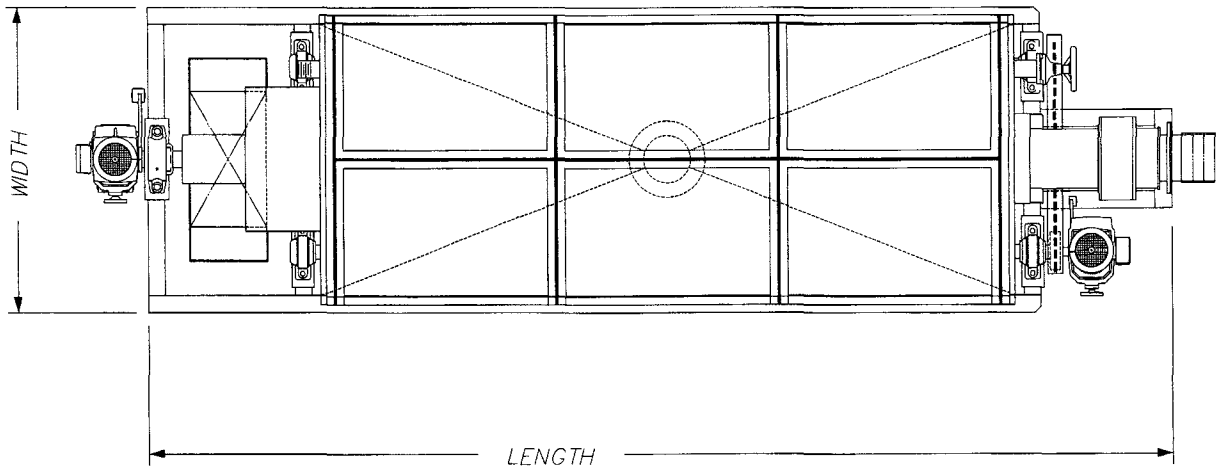

High Consistency Rotary Screen Thickeners

Model No.	Motor HP	Length	Height	Width	Weight	Shower gpm	Max. flow (gpm)
RST-HCS630x3000L	2 & 3	200"	43"	53"	7,000 lb.	15–20	300–350
RST-HCS775x3600L	3 & 5	235"	50"	58"	8,250 lb.	15–20	400–450
RST-HCW630x3000L	3 & 5	200"	43"	87"	9,700 lb.	30–40	600–700
RST-HCW775x3600L	5 & 10	235"	51"	93"	11,700 lb.	30–40	800–900

RST = rotary screen thickener
HC = high consistency model
S = single drum model
W = double drum model
First number = drum diameter in millimeters
Second number = drum length in millimeters
Shower water pressure = 30–40 psi recommended
Maximum flow rate capability varies depending on the specifics of a given application.

FKC Co., Ltd.
2708 W. 18th Street
Port Angles, WA 98363
(360) 452-9472
www.fkcscrewpress.com
mail@fkcscrewpress.com

ANDRITZ Dewatering Technologies

ANDRITZ Budgetary Inquiry#1228588-1

November 5, 2012

In response to:

HDR Engineering
2121 N. California Blvd. Suite 475
Walnut Creek, CA 94596
For Pinole
WPCP
Pinole, CA

ANDRITZ Local Representative-Mike Tooley
925-225-1900
mtooley@miscowater.com

This proposal is the confidential and proprietary information of ANDRITZ Separation Inc. Any party accepting receipt of this proposal does so on the express understanding and agreement that they will neither copy, reproduce, disclose to third parties or use this proposal for any purpose other than those expressly agreed to by ANDRITZ Separation Inc. in writing. Such party also agrees to indemnify ANDRITZ Separation Inc. against any losses or damages suffered by ANDRITZ Separation Inc. as a result of such party's improper reproduction, disclosure or use of this proposal.

ANDRITZ Proposal Index

Letter Of introduction

A. Design Criteria

B. Recommended Equipment and Performance

C. Scope of Supply

D. Price

E. Scope Exclusions

F.ANDRITZ Terms and Conditions of Sale

G. Machine Specifications and Cut Sheets

. 1.5M SMX-S8 Specifications

Layout Drawings

ANDRITZ SEPARATION INC.
1010 Commercial Blvd. S.
Arlington, Texas 76001
Tel. (817) 465-5611
Fax (817) 468-3961
environ.us@ANDRITZ.com

November 05, 2012

HDR Engineering
2121 N. California Blvd. Suite 475
Walnut Creek , CA 94596

Attn: Ms. Shore

REFERENCE: Pinole WPCP

Dear Ms. Shore

As requested by the local ANDRITZ equipment representative for your area I am providing you this information package that details the ANDRITZ Low Profile belt filter press. ANDRITZ is pleased to provide you with this package that not only provides budgetary pricing but also defines the ANDRITZ Low Profile belt press features.

I would like to point out that all of ANDRITZ products are engineered for quality and value. ANDRITZ designs their belt presses too compete in a market that desires equipment with the reliable life cycle time, ease of operation and lowest maintenance costs. The following outline of the features and benefits of the ANDRITZ Low Profile belt filter press technology will help to define why ANDRITZ competes in this market area.

Please review the following information. Should you have further questions regarding our equipment or company, please contact our local equipment representative Mike Tooleyr (925)963-6276 or myself at (817) 419-1730

Sincerely,

Bruce SoRelle
Western
Regional Sales Manager
ANDRITZ Separation Inc.

Cc: Mike Tooley-Miscowater

ANDRITZ
Environment & Process

ANDRITZ

Belt Filter Press Features & Benefits

Several equipment manufacturers actively market belt filter press technology. As a result, different levels of manufacturing become distinct, **quality competitive** and **price competitive**. Price competitive features include; lower effective filtration areas, channel frames, and un-machined rolls to name a few. Quality competitive features include; high effective filtration areas, wide flange beam frames, 316L stainless steel wetted areas, and machined rolls. ANDRITZ offers both or a combination of quality levels in their equipment to cater to specific applications and needs. ANDRITZ has developed and maintains a reputation for manufacturing quality equipment. While bottom dollar price is initially attractive, it ultimately costs the owner considerably throughout the life of the equipment with high O&M costs and unscheduled downtime. The owner's interests are clearly protected by quality-engineered designs. For this reason ANDRITZ offers designs that provide both quality and value. To detail several quality features of the SMX-S8, Low Profile belt press technology, please review the following:

2.0-Meter, Low Profile SMX-S8, Effective Filtration Area

Effective filtration area relates directly to throughput and performance.

	ANDRITZ S8 (Based on 1.5m)
Gravity zone area	67.5 ft^2
Wedge zone area	62.2 ft^2
Pressure zone area	91.5 ft^2
Total	**231.2 ft^2**

Plow Assembly

ANDRITZ utilizes a plow design that not only distributes the feed across the width of the belt, but also allows for a gentle rolling action which releases additional free water. The entire assembly is manufactured of 316L stainless steel as a standard. The use of stainless steel and our chicane design minimizes cost of ownership in

Arlington, Texas 76001
Tel. (817) 465-5611
Fax (817) 468-3961
environ.us@ANDRITZ.com

terms of polymer consumption and replacement due to corrosion and abrasion.

Cambered Wedge

This innovative design allows a self-adjusting, constant pressure to be applied to the sludge cake regardless of belt speed and solids loading fluctuations. Case studies have proven that a 2 to 4 percent increase in cake solids is achieved from the cambered wedge design. The self-adjusting feature is key to maximum wedge zone efficiency.

High Pressure Zone

The ANDRITZ low profile unit incorporates a 24" perforated drum followed by seven (7) rolls that sequentially decrease in diameter. This configuration increases surface tension, and allows for a gradual increasing pressure on the sludge cake, thus increasing cake dryness.

Rollers

All ANDRITZ presses utilize a three step machining process on our rollers. This insures precision centering in the journal and concentricity. Approximated journals increase the probability of oval journal rotation that deform the bearing seal and permits moisture intrusion into the bearing housing. Unmachined roller surfaces allow for hills and valleys on the roller face. This promotes wear at varying rates as well as accelerates belt wear. The ANDRITZ double shaft construction has a minimum roll wall thickness of 1/2" and minimum rubber coating thickness of 1/4". All rollers are machined to a concentricity of 0.020".

Belt Tracking

Tracking a traveling belt has been developed to a fine art in the pulp and paper industry. Few belt press manufacturers are aware and understand the technology. You may be aware paper machines travel up to 4,000 ft/min. ANDRITZ incorporates this same **proportional** tracking with continuous

monitoring into our belt press design.

Belt Tensioning

ANDRITZ – rack & pinion assemblies are manufactured of 316L stainless steel. Rack and pinion belt tensioning insures parallel movement of the tensioning roll. ANDRITZ tensioning design eliminates the need for O-rings, which decreases O&M and downtime.

Service After The Sale

Of utmost importance is ANDRITZ support after the sale. ANDRITZ has earned a strong reputation in the marketplace by providing quality service with emphasis on customer satisfaction. We continuously support our customers with prompt availability and fair spare parts pricing. ANDRITZ also has a laboratory-staffed full time to evaluate and assist customers with process upset conditions. This service is available to all ANDRITZ customers free of charge. ANDRITZ also can provide bench testing and on site pilot testing during project development stages. These services establish specific performance capabilities that assist with performance specification development. It is highly recommended that these services be utilized.

Summary

In summary, we recognize that we need to go the extra mile for our customers. Our services for belt filter press technology have been in the U.S. market since 1978. **We want to earn your business.** Should ANDRITZ be purchased for this project, the customer can rest assured that their dewatering equipment needs will be met with total satisfaction.

Features & Benefits Quick Reference Guide

	FEATURE	BENEFIT
A)	Precision Machined rollers	Longer roller life Longer belt life Reduced O&M expenses
B)	Interconnected belt tensioning thrust arms	Tensioning arms must remain parallel thus insuring accurate belt tracking
C)	Paper machine quality belt tracking mechanism	Automatic belt travel correction which increases belt life and roller surface life
D)	Replaceable UHMW wear bars that do not require frame disassembly	Lowers O&M cost by $10K/5 years of ownership
E)	Plows that invert sludge upon passing	Exposes wear to filter media
F)	All stainless steel UHMW wear bar support grid	Lowers O&M cost
G)	Split pillow block bearing housing	Can replace bearing without roller removal off the shelf items
H)	Solid bearing exterior housing	Prevents moisture intrusion
I)	Double end stub journal design with minimum .5" wall thickness	Roller deflection of .05mm" or less per meter, lower O&M cost
J)	24" diameter perforated drum roller	Higher throughput
K)	8 sequentially decreasing diameter high pressure rollers	Higher dryness at discharge
L)	Pneumatic operation	No mess; no routine maintenance
M)	Total effective filtration area of 295.4 sq. ft.	High performance in both throughout or dryness

ANDRITZ

Information Package

For

1.5M SMX-S8 Belt Filter Press

Pinoles WPCP

November 05, 2012

A. Design Criteria (Year Around Dewatering)

1. Type of Sludge	Not Identified
2.Estimated feed Solids	2.0% T.S
3.Solids loading	961 lbs. T.S./HR
4.Volatile Solids Content	TBD %NVS
5.CST	TBD Seconds

B. Equipment Recommended and Anticipated Performance

1 Number of Units Req'd	Two (2) 1.5M SMX-S8, (1) standby
2. Solids Loading per Unit	961 Lbs./Hr. T.S.
3. Flow Rate per Unit	91 GPM, Feed
4.Solids Capture	95%
Polymer Consumption Estimated	15-25 Lbs. Active/Ton T.S.

Note: ANDRITZ recommends laboratory testing to establish process variables prior to bidding project to establish actual process values.

C. Scope of Supply Included in ANDRITZ Pricing:

Item.#	QTY	Description
1	**2**	The ANDRITZ 1.5 Meter, SMX®-S8, Belt Filter Press comes standard with a "Hot Dipped" galvanized carbon steel frame, and all wetted parts 316L stainless steel including: • Pneumatic or Hydraulic tracking and belt tensioning system • Triple-sealed split pillow block bearings • One (1) set of seamed dewatering fabrics • Buna N rubber and Rilsan covered rolls • Upper & lower stainless steel showers with internal brush and hand wheel for cleaning • Upper & lower automatic dewatering fabric tracking and tensioning device • Eurodrive reducer complete with motor mounting bracket, high speed coupling, and guards with motor and VFD • Wiring of emergency stop and belt runoff limit switches • Gravity zone plows with stainless steel assembly and fixtures • Nema 4X 304L stainless steel electric control panel • **316L SS assemblies included** - Headbox - Venturi Mixer - Distribution plate - Gravity zone sidewalls - Grid brackets in gravity and wedge sections - Thrust rod guides - Upper and lower shower boxes - Filtrate pans in all areas - All nuts, bolts, and associated hardware - Plow assemblies -

2	**1 Lot**	**Basic Engineering and Documentation**: (Typically includes the following) • Six sets arrangement drawings and dimensions for the ANDRITZ scope • Six sets foundation drawings showing details needed for building work • Motor list • Written sequence of operation including all interlocks • Control panel layout • Electrical and pneumatic schematics • Terminal box details • Erection, operating and maintenance manuals Six sets operation/part manuals
3	**1 Lot**	**The following is provided in this proposa** • Five Days Start and Training Pre Startup Checkout Mechanical and Electrical Pre Startup • Laboratory Process Evaluation Physical Characteristic Analysis of Sludge • Polymer Selection • Belt Press Simulation • Follow up Lab evaluations at No Charge

C. Pricing Summary

Item #	Description	Price / Unit	Price Complete
1-3	Four (4) 2.0 meter ANDRITZ SMX-S8 Belt Press.....	$225,000	$450,000

D. Commercial Conditions

Terms and Conditions

This price proposal is based on the attached ANDRITZ Separation, Inc. “Standard Terms and Conditions of Sale”.

Special Information

- Prices do not include any unloading or any applicable fees or taxes (Local, Federal, or Final Destination).
- Quotation is valid for ninety (90) days.
- All prices quoted in U.S. dollars.

Terms of Payment, 30 Days Net

- 10% of contract value with receipt of acknowledged copy of purchase order
- 80% of equipment value upon notice of readiness of shipment
- 10% of contract value upon performance acceptance, not to exceed 90 days from the date of delivery.

Approval and Certified Drawings

The package that constitutes “Drawings for Approval and Certified Drawings” is comprised of the following. For invoicing purposes, this list is complete. However, additional drawings may be submitted, but not considered part of the “Approval” process.

• Foundation drawing
• Connection details (piping)
• Pneumatic/electric schematic, panel layouts

Approval drawings will be shipped approximately 4 - 6 weeks after receipt of purchase order. Certified drawings will be shipped approximately 2 weeks after receipt of approval drawings.

Shipment

ANDRITZ shipment is 18-20 weeks from receipt of order.

Engineering

Following are the major engineering services provided by ANDRITZ with this Contract:

a). General arrangement drawings of equipment supplied by ANDRITZ designed for installation;

b). Material balance information required for sizing of process control instrumentation;

c). Machine outline drawings, complete with piping and writing requirement;

d). Electrical and pneumatic panel and wiring drawings, if provided by ANDRITZ;

e). Operating and maintenance manuals, including spare parts lists;

f). Motor and drive list;

g). Sequence of operation.

Project Management

ANDRITZ will appoint a Project Manager for the duration of the contract. Project Management services are included in this package and are as follows:

a). Production of a complete critical path project schedule for ANDRITZ equipment;

b). Coordinate with the customer's Engineering and ANDRITZ Engineering on system design and drawing schedule commitments;

c). Coordinate with manufacturing on material procurement and construction to ensure ANDRITZ commitments are maintained.

Erection, Training, and Start-Up Assistant

ANDRITZ will provide additional erection and start-up supervision for which the purchaser shall pay $1,200.00/day (US) plus expenses, eight (8) hours/day.

At the request of the Purchaser, overtime service will be provided at a rate of 1.5 times quoted rates for weekdays and 2.0 times quoted rates for weekends.

Expenses are defined as the cost of travel from Seller's plant to the point of installation and return, together with all living expenses during the period of service.

The above charges shall be made for time involved including delays which are beyond the Seller's control.

Equipment Standards

Any deviations from the ANDRITZ standard mechanical and electrical specification, which are not the owner's preference, must be further discussed. Refer to the ANDRITZ standard specifications enclosed.

Supplies and Services NOT Included in this Quotation :

Specifically the ANDRITZ scope of supply does NOT include the following items as may be necessary for equipment installation & operation to the performance levels specified:

- civil engineering, design & supply of structural steel & concrete as needed for support of the ANDRITZ supplied equipment,
- polymer, flocculation systems, piping, controls etc.,

- slurry pumps, piping, valves, nor controls nor indication of flows,
- structural steel supports for Gravity Table, or any associated walkways, handrails, stairs, ladders, etc., as will be required to service and operate the Gravity Table,
- MCC high voltage bus, field wiring, diagrams, etc.,
- piping, hoses, clamps, fittings, stands, etc. to shower pipes of ANDRITZ machines,
- drain hoses, pipes, clamps, fittings, etc. from ANDRITZ machines,
- instrumentation, flow, level nor pressure measurement devices for slurry, polymer water or air supply lines to the sludge dewatering equipment, or panels,
- SAMA diagrams, instrument lists, specifications nor selection criteria for instruments nor sensors,
- valves, piping fittings, elbows, hangers, straps, clamps, hoses, etc.,
- LIC, FIC, SIC, PID nor any process related type measuring instruments,
- field installation, tools, labor nor materials or tools to do same,
- field wiring, conduit, labor, etc. nor materials or tools to do same,
- maintenance tools, jigs, fixtures, etc. as required to service machine,
- lubricants, applicators, oilers, filters, etc. nor equipment to service machine
- Freight to site

ANDRITZ SEPARATION INC. STANDARD TERMS AND CONDITIONS OF SALE

1. TERMS APPLICABLE

The Terms and Conditions of Sale listed below are the exclusive terms and conditions applicable to quotations made and orders acknowledged by the ANDRITZ entity supplying the same ("Seller") for the sales of products, equipment and parts relating thereto ("Products"). If this quotation or acknowledgment contains terms additional to or different from those offered by Buyer, then any acceptance by Seller is expressly made conditional upon Buyer's assent to such additional or different terms. Any of Buyer's terms and conditions that are in addition to or different from those contained herein, which are not separately agreed to by Seller in writing, are hereby objected to and shall be of no effect. [The term "this Agreement" as used herein means this quotation or acknowledgment or purchase order, together with any attachment hereto, any documents expressly incorporated by reference and these Terms and Conditions of Sale.

2. DELIVERY

Delivery dates are good faith estimates and do not mean that "time is of the essence." Buyer's failure to promptly make advance or interim payments, supply technical information, drawings and approvals will result in a commensurate delay in delivery. Upon and after delivery, risk of loss or damage to the Products shall be Buyer's. Delivery of the Products hereunder will be made on the terms agreed to by the parties as set forth in this Agreement, according to INCOTERMS 2010.

3. WARRANTY

(a) Seller warrants to Buyer that the Products manufactured by it will be delivered free from defects in material and workmanship. This warranty shall commence upon delivery of the Products and shall expire on the earlier to occur of 12 months from initial operation of the Products and 18 months from delivery thereof (the "Warranty Period"). If during the Warranty Period Buyer discovers a defect in material or workmanship of a Product and gives Seller written notice thereof within 10 days of such discovery, Seller will, at its option, either deliver to Buyer, on the same terms as the original delivery was made, according to INCOTERMS 2010, a replacement part or repair the defect in place. Any repair or replacement part furnish pursuant to this warranty are warranted against defects in material and workmanship for one period of 12 months from completion of such repair or replacement, with no further extension. Seller will have no warranty obligations for the Products under this paragraph 3(a): (i) if the Products have not been operated and maintained in accordance with generally approved industry practice and with Seller's specific written instructions; (ii) if the Products are used in connection with any mixture or substance or operating condition other than that for which they were designed; (iii) if Buyer fails to give Seller such written 10 day notice; (iv) if the Products are repaired by someone other than Seller or have been intentionally or accidentally damaged; (v) for corrosion, erosion, ordinary wear and tear or in respect of any parts which by their nature are exposed to severe wear and tear or are considered expendable; or (vi) for expenses incurred for work in connection with the removal of the defective articles and reinstallation following repair or replacement.

(b) Seller further warrants to Buyer that at delivery, the Products manufactured by it will be free of any liens or encumbrances. If there are any such liens or encumbrances, Seller will cause them to be discharged promptly after notification from Buyer of their existence.

(c) THE EXPRESS WARRANTIES SELLER MAKES IN THIS PARAGRAPH 3 ARE THE ONLY WARRANTIES IT WILL MAKE. THERE ARE NO OTHER WARRANTIES, WHETHER STATUTORY, ORAL, EXPRESS OR IMPLIED. IN PARTICULAR, THERE ARE NO IMPLIED WARRANTIES OF MERCHANTABILITY OR FITNESS FOR A PARTICULAR PURPOSE.

(d) The remedies provided in paragraphs 3(a) and 3(b) are Buyer's exclusive remedy for breach of warranty.

(e) With respect to any Product or part thereof not manufactured by Seller, Seller shall pass on to Buyer only those warranties made to Seller by the manufacturer of such Product or part which are capable of being so passed on.

4. LIMITATION OF LIABILITY

Notwithstanding any other provision in this Agreement, the following limitations of liability shall apply:

(a) In no event, whether based on contract, tort (including negligence), strict liability or otherwise, shall Seller, its officers, directors, employees, subcontractors, suppliers or affiliated companies be liable to Buyer or any third party for loss of profits, revenue or business opportunity, loss by reason of shutdown of facilities or inability to operate any facility at full capacity, or cost of obtaining other means for performing the functions performed by the Products, loss of future contracts, claims of customers, cost of money or loss of use of capital, in each case whether or not foreseeable, or for any indirect, special, incidental or consequential damages of any nature.

(b) The aggregate liability of Seller, its officers, directors, employees, subcontractors, suppliers or affiliated companies, for all claims of any kind for any loss, damage, or expense resulting from, arising out of or connected with the Products or this Agreement or from the performance or breach thereof, together with the cost of performing make good obligations to pass performance tests, if applicable, shall in no event exceed the contract price. The foregoing not withstanding, if applicable, any claims for (a) delay in delivery shall not exceed 5% and (b) breach of performance guarantees shall not exceed 15% of the order price.

(c) The limitations and exclusions of liability set forth in this paragraph 4 shall take precedence over any other provision of this Agreement and shall apply whether the claim of liability is based on contract, warranty, tort (including negligence), strict liability, indemnity, or otherwise. The remedies provided in this Agreement are Buyer's exclusive remedies.

(d) All liability of Seller, its officers, directors, employees, subcontractors, suppliers or affiliated companies, resulting from, arising out of or connected with the Products or this Agreement or from the performance or breach thereof shall terminate on the third anniversary of the date of this Agreement.

5. CHANGES, DELETIONS AND EXTRA WORK

Seller will not make changes in the Products unless Buyer and Seller have executed a written Change Order for such change. Any such Change Order will include an appropriate adjustment to the contract price and delivery terms. If the change impairs Seller's ability to satisfy any of its obligations to Buyer, the Change Order will include appropriate modifications to this Agreement. If, after the date of this quotation or acknowledgment, new or revised governmental requirements should require a change in the Products, the change will be subject to this paragraph 5.

6. TAXES

Seller's prices do not include any sales, use, excise or other taxes. In addition to the price specified herein, the amount of any present or future sales, use, excise or other tax applicable to the sale or use of the Products shall be billed to and paid by Buyer unless Buyer provides to Seller a tax-exemption certificate acceptable to the relevant taxing authorities.

7. SECURITY INTEREST

Seller shall retain a purchase money security interest and Buyer hereby grants Seller a lien upon and security interest in the Products until all payments hereunder have been made in full. Buyer acknowledges that Seller may file a financing statement or comparable document as required by applicable law and may take all other action it deems reasonably necessary to perfect and maintain such security interest in Seller and to protect Seller's interest in the Products.

8. SET OFF

Neither Buyer nor any of its affiliates shall have any right to set off claims against Seller or any of its affiliates for amounts owed under this Agreement or otherwise.

9. PATENTS

Unless the Products or any part thereof are designed to Buyer's specifications and provided the Product or any part thereof is not used in any manner other than as specified or approved by Seller in writing, (i) Seller shall defend against any suit or proceeding brought against Buyer to the extent based on a claim that any Product, or any part thereof, infringes any United States device patent; provided Seller is notified

promptly in writing and given the necessary authority, information and assistance for the defense of such suit or proceeding; (ii) Seller shall satisfy any judgment for damages entered against Buyer in such suit; and (iii) if such judgment enjoins Buyer from using any product or a part thereof, then Seller shall, at its option: (a) obtain for Buyer the right to continue using such Product or part; (b) eliminate the infringement by replacing or modifying all or part of the Products; or (c) take back such Product or part and refund to Buyer all payments on the purchase price which Seller has received, in which case neither Buyer nor Seller will have any claim against the other under this Agreement or arising out of the subject matter of this Agreement. The foregoing states Seller's entire liability for patent infringement by any Product or part thereof.

10. SOFTWARE LICENSE, WARRANTY, FEES

The following Software Terms and Conditions apply to any software furnished by Seller, whether separately packaged or embedded in the Products furnished by Seller hereunder:

(a) Seller hereby grants to Buyer: a non-exclusive, non-transferable license to use any computer software delivered to Buyer under this Agreement in machine-readable, object code form and any modifications made by Seller thereto ("Software"), but only in connection with the configuration of the Products and operating system for which the Software is ordered and for the end-use purpose stated in the related Seller operating documentation. Buyer agrees that neither it nor any third party shall modify, reverse engineer, decompile or reproduce the Software, without Seller's prior written consent, except for making a single copy for backup or archival purposes in accordance with the related Seller operating documentation, and provided that Seller's confidential and proprietary legend is included. Except to the extent that the parties otherwise agree in writing, Buyer's license to use the copy of such Software shall terminate upon breach of this license or Agreement by Buyer, including, without limitation, breach of payment or confidentiality obligations. All copies of the Software are the property of Seller, and all copies for which the license is terminated shall be returned to Seller promptly after termination.

(b) Buyer may not transfer this software license and warranty to a third party without Seller's previous written consent, signed by a Seller authorized representative.

(c) Seller warrants that on the date of shipment of the Software only to Buyer or Buyer's Seller-authorized transferee hereunder that: (1) the Software media contain a true and correct copy of the Software and are free from material defects; (2) Seller has the right to grant the license hereunder; and (3) the Software will function substantially in accordance with the related Seller operating documentation. Seller disclaims any warranty that the operation of the Software will be uninterrupted or error free. This warranty does not apply to software delivered by Seller but produced by others. The warranty for software produced by others shall be the warranty as stated by the software producer.

(d) If within six months (6) months from date of initial installation (but not more than one year from date of shipment by Seller to Buyer) of Software, Buyer discovers that the Software is not as warranted above and promptly notifies Seller in writing, within this period of time, of the nonconformity, and if Seller cannot correct the nonconformity or deems correction to be commercially impracticable or prohibitively expensive, Buyer's and Buyer's Seller-authorized transferee's exclusive remedies, at Seller's option and expense, are: (1) replacement of the nonconforming Software; or (2) termination of this license and a refund of an equitable, pro rata share of the contract price or license fee paid.

(e) If any infringement and trade secret claims are made against Buyer based on the Buyer's use of the Software in a manner specified or approved by Seller, Seller shall: (i) defend against any suit or proceeding brought by an unaffiliated third party against Buyer to the extent the suit or proceeding is based on a claim that the Software or that the specified or approved use of the Software infringes a United States patent, a copyright or violates a trade secret agreement in which Seller was a party and provided that Seller is notified promptly in writing and given the necessary authority, information and assistance for the defense and settlement of such suit or proceeding (including the sole authority to select counsel and remove the Software or stop accused infringing usage); (ii) Seller shall satisfy any settlement or final judgment (after any appeals) for damages entered against Buyer in such suit; and (iii) if such settlement prohibits or judgment enjoins Buyer from using the Software, Seller shall at its option: (a) obtain for Buyer the right to continue using such Software; (b) eliminate the infringement by replacing or modifying the Software, or (c) take back such Software and refund to Buyer all payments on the purchase price which Seller has received, in which case neither Buyer nor Seller will have any claim against the other under this Agreement or arising out of the subject matter of this Agreement. However, Seller's obligations with respect to infringement and trade secret claims will not apply to the extent that the claim or adverse final judgment is based on: (1) Buyer's running of the Software after being notified to discontinue running due to such a claim; (2) the combination of the Software with a non-Seller software, product, data or process; (3) damages attributable to the value of the use of a non-Seller software, product, data, or process; (4) Buyer's alteration of the Software; (5) Buyer's distributed the Software to, or its use for the benefit of, any third party; or (6) Buyer's acquiring a trade secret (a) through improper means; (b) under circumstances giving rise to a duty to maintain its secrecy or limit its use; or (c) from a person (other than Seller) who owed to the party asserting the claim a duty to maintain the secrecy or limit the use of the trade secret. Buyer will reimburse Seller for any costs or damages that result from these actions 1 to 6. If Seller receives information about an infringement claim related to the Software, Seller may do any of the following, at its expense and without obligation to do so: (i) procure the right to continue use of the Software, (ii) replace the Software with a functional equivalent and (iii) modify the Software to make it non-infringing (including disabling the challenged functionality and under circumstances (ii) and (iii) Buyer will stop running the allegedly infringing software immediately).

(f) This warranty will apply for the period specified in (d) above, provided that: (1) the Software is not modified, changed, or altered by anyone other than Seller or its suppliers, unless authorized by Seller in writing; (2) there is no change by anyone other than Seller to the goods for which the Software is ordered; (3) the goods are in good operating order and are installed in a suitable operating environment; (4) the nonconformity is not caused by Buyer or any of their agents, servants, employees, or contractors, or any third party; (5) Buyer promptly notifies Seller in writing, within the period of time set forth in (d) above, of the nonconformity after it is discovered; and (6) all fees for the Software due to Seller have been paid. SELLER HEREBY DISCLAIMS ALL OTHER WARRANTIES, EXPRESS OR IMPLIED, WITH REGARD TO THE SOFTWARE, INCLUDING BUT NOT LIMITED TO IMPLIED WARRANTIES OF MERCHANTABILITY, FITNESS FOR A PARTICULAR PURPOSE, COURSE OF DEALING AND USAGE OF TRADE.

(g) Buyer and successors of Buyer are limited to the remedies specified in this paragraph 10 and shall have no others for a nonconformity in the Software. Buyer agrees that these remedies provide Buyer and its successors with a minimum adequate remedy and are their exclusive remedies, whether Buyer's or successors' remedies are based on contract, warranty, tort (including negligence), strict liability, indemnity, or any other legal theory, and whether arising out of warranties, representations, instructions, operating documentation, installations, or non-conformities from any cause.

(h) Unless otherwise provided in this Agreement, the fees for this Software license are included in the purchase price of the Products. Any subsequent modifications or enhancements to the Software made by Seller are, at Seller's option, subject to a fee.

11. TERMINATION

Buyer may only terminate its order upon written notice to Seller and upon payment to Seller of Seller's termination charges, which shall be specified to Buyer and shall take into account among other things expenses (direct and indirect) incurred and commitments already made by Seller and an appropriate profit; provided, that in no event shall Seller's termination charges be less than 25% of the contract price. Seller shall have the right to suspend and/or terminate its obligations under this Agreement if payment is not received within 30 days of due date. In the event of the bankruptcy or insolvency of Buyer or in the event of any bankruptcy or insolvency proceeding brought by or against Buyer, Seller shall be entitled to terminate any order outstanding at any time during the period allowed for filing claims against the estate and shall receive reimbursement for its cancellation charges.

12. CONFIDENTIALITY

Buyer acknowledges that the information which Seller submits to Buyer in connection with this quotation, acknowledgment or performance of this Agreement includes Seller's confidential and proprietary information, both of a technical and commercial nature. Buyer agrees not to disclose such information to third parties without Seller's prior written consent. Seller grants to Buyer a non-exclusive, royalty-free, perpetual license to use Seller's confidential and proprietary information for purposes of this Agreement and the Products that are the subject hereof only. Buyer further agrees not to permit any third party to fabricate the Products or any parts thereof from Seller's drawings or to use the drawings other than in connection with this Agreement. Buyer will defend and indemnify Seller from any claim, suit or liability based on personal injury (including death) or property damage related to any Product or part thereof which is fabricated by a third party without Seller's prior written consent and from and against related costs, charges and expenses (including attorneys fees). All copies of Seller's drawings shall remain Seller's property and may be reclaimed by Seller at any time.

13. END USER

If Buyer is not the end user of the Products sold hereunder (the "End User"), then Buyer will use its best efforts to obtain the End User's written consent to be bound to Seller by the provisions hereof. If Buyer does not obtain such End User's consent, Buyer shall defend and indemnify Seller and Seller's agents, employees, subcontractors and suppliers from any action, liability, cost, loss, or expense for which Seller would not have been liable or from which Seller would have been indemnified if Buyer had obtained such End User's consent.

14. FORCE MAJEURE

(a) Force Majeure Defined. For the purpose of this Agreement "Force Majeure" will mean all unforeseeable events, beyond the reasonable control of either party which affect the performance of this Agreement, including, without limitation, acts of God, acts or advisories of governmental or quasi-governmental authorities, laws or regulations, strikes, lockouts or other industrial disturbances, acts of public enemy, wars, insurrections, riots, epidemics, pandemics, outbreaks of infectious disease or other threats to public health, lightning, earthquakes, fires, storms, severe weather, floods, sabotage, delays in transportation, rejection of main forgings and castings, lack of available shipping by land, sea or air, lack of dock lighterage or loading or unloading facilities, inability to obtain labor or materials from usual sources, serious accidents involving the work of suppliers or sub-suppliers, thefts and explosions.

(b) Suspension of Obligations. If either Buyer or Seller is unable to carry out its obligations under this Agreement due to Force Majeure, other than the obligation to make payments due hereunder, and the party affected promptly notifies the other of such delay, then all obligations that are affected by Force Majeure will be suspended or reduced for the period of Force Majeure and for such additional time as is required to resume the performance of its obligations, and the delivery schedule will be adjusted to account for the delay.

(c) Option to Terminate. If the period of suspension or reduction of operations will extend for more than four (4) consecutive months or periods of suspension or reduction total more than six (6) months in any twelve (12) month period, then either Buyer or Seller may terminate this Agreement.

15. INDEMNIFICATION AND INSURANCE

(a) Indemnification. Seller agrees to defend and indemnify Buyer from and against any third-party claim for bodily injury or physical property damage ("Loss") arising in connection with the Products provided by Seller hereunder or the work performed by Seller hereunder, but only to the extent such Loss has been caused by the negligence, willful misconduct or other legal fault ("Fault") of Seller. Buyer shall promptly tender the defense of any such third-party claim to Seller. Seller shall be entitled to control the defense and resolution of such claim, provided that Buyer shall be entitled to be represented in the matter by counsel of its choosing at Buyer's sole expense. Where such Loss results from the Fault of both Seller and Buyer or a third party, then Seller's defense and indemnity obligation shall be limited to the proportion of the Loss that Seller's Fault bears to the total Fault.

(b) Insurance. Seller shall maintain commercial general liability insurance with limits of not less than $2,000,000 per occurrence and in the aggregate covering claims for bodily injury (including death) and physical property damage arising out of the Products. Seller will provide a Certificate of Insurance certifying the existence of such coverages upon request.

16. GENERAL

(a) Seller represents that any Products or parts thereof manufactured by Seller will be produced in compliance with all applicable federal, state and local laws applicable to their manufacture and in accordance with Seller's engineering standards. Seller shall not be liable for failure of the Products to comply with any other specifications, standards, laws or regulations.

(b) This Agreement shall inure only to the benefit of Buyer and Seller and their respective successors and assigns. Any assignment of this Agreement or any of the rights or obligations hereunder, by either party without the written consent of the other party shall be void.

(c) This Agreement contains the entire and only agreement between the parties with respect to the subject matter hereof and supersedes all prior oral and written
understandings between Buyer and Seller concerning the Products and any prior course of dealings or usage of the trade not expressly incorporated herein.

(d) This Agreement may be modified, supplemented or amended only by a writing signed by an authorized representative of Seller. Seller's waiver of any breach by Buyer of any terms of this Agreement must also be in writing and any waiver by Seller or failure by Seller to enforce any of the terms and conditions of this Agreement at any time, shall not affect, limit or waive Seller's right thereafter to enforce and compel strict compliance with every term and condition thereof.

(e) (i) If the Products are delivered or performed in the United States, this Agreement and the performance thereof will be governed by and construed according to the laws of the State of Georgia.

(ii) In the circumstances of (i) above, any controversy or claim arising out of or relating to this Agreement, or the breach thereof, or to the Products provided pursuant hereto, shall be definitively settled by arbitration, to the exclusion of courts of law, administered by the American Arbitration Association ("AAA") in accordance with its Construction Industry Arbitration Rules in force at the time this Agreement is signed and to which the parties declare they will adhere (the "AAA Rules"), and judgment on the award rendered by the arbitrator(s) may be entered in any court having jurisdiction over the party against whom enforcement is sought or having jurisdiction over any of such party's assets. The arbitration shall be conducted in Atlanta, Georgia by a panel of three members, one of whom will be appointed by each of Buyer and Seller and the third of whom will be the chairman of the panel and will be appointed by mutual agreement of the two party-appointed arbitrators. All arbitrators must be persons who are not employees, agents, or former employees or agents of either party. In the event of failure of the two party-appointed arbitrators to agree within forty-five (45) days after submission of the dispute to arbitration upon the appointment of the third arbitrator, the third arbitrator will be appointed by the AAA in accordance with the AAA Rules. In the event that either of Buyer or Seller fails to appoint an arbitrator within thirty (30) days after submission of the dispute to arbitration, such arbitrator, as well as the third arbitrator, will be appointed by the AAA in accordance with the AAA Rules.

(f) (i) If the Products are delivered or performed in Canada, this Agreement and the performance thereof will be governed by and construed according to the laws of the Province of New Brunswick.

(ii) In the circumstances of (i) above, any controversy or claim arising out of or relating to this Agreement, or the breach thereof, or to the Products provided pursuant hereto, shall be definitively settled under the auspices of the Canadian Commercial Arbitration Centre ("CCAC"), by means of arbitration and to the exclusion of courts of law, in accordance with its General Commercial Arbitration Rules in force at the time the Agreement is signed and to which the parties declare they will adhere (the "CCAC Rules"), and judgment on the award rendered by the arbitrator(s) may be entered in any court having jurisdiction over the party against whom enforcement is sought or having jurisdiction over any of such party's assets. The arbitration shall be conducted in Saint John, New Brunswick by a panel of three arbitrators, one of whom will be appointed by each of Buyer and Seller and the third of whom will be the chairman of the arbitral tribunal and will be appointed by mutual agreement of the two party-appointed arbitrators. All arbitrators must be persons who are not employees, agents, or former employees or agents of either party. In the event of failure of the two party-appointed arbitrators to agree within forty-five (45) days after submission of the dispute to arbitration upon the appointment of the third arbitrator, the third arbitrator will be appointed by the CCAC in accordance with the CCAC Rules. In the event that either of Buyer or Seller fails to appoint an arbitrator within thirty (30) days after submission of the dispute to arbitration, such arbitrator, as well as the third arbitrator, will be appointed by the CCAC in accordance with the CCAC Rules.

(g) The parties hereto have required that this Agreement be drawn up in English. Les parties aux présentes ont exigé que la présente convention soit rédigée en anglais.

Jan 2012 Rev.

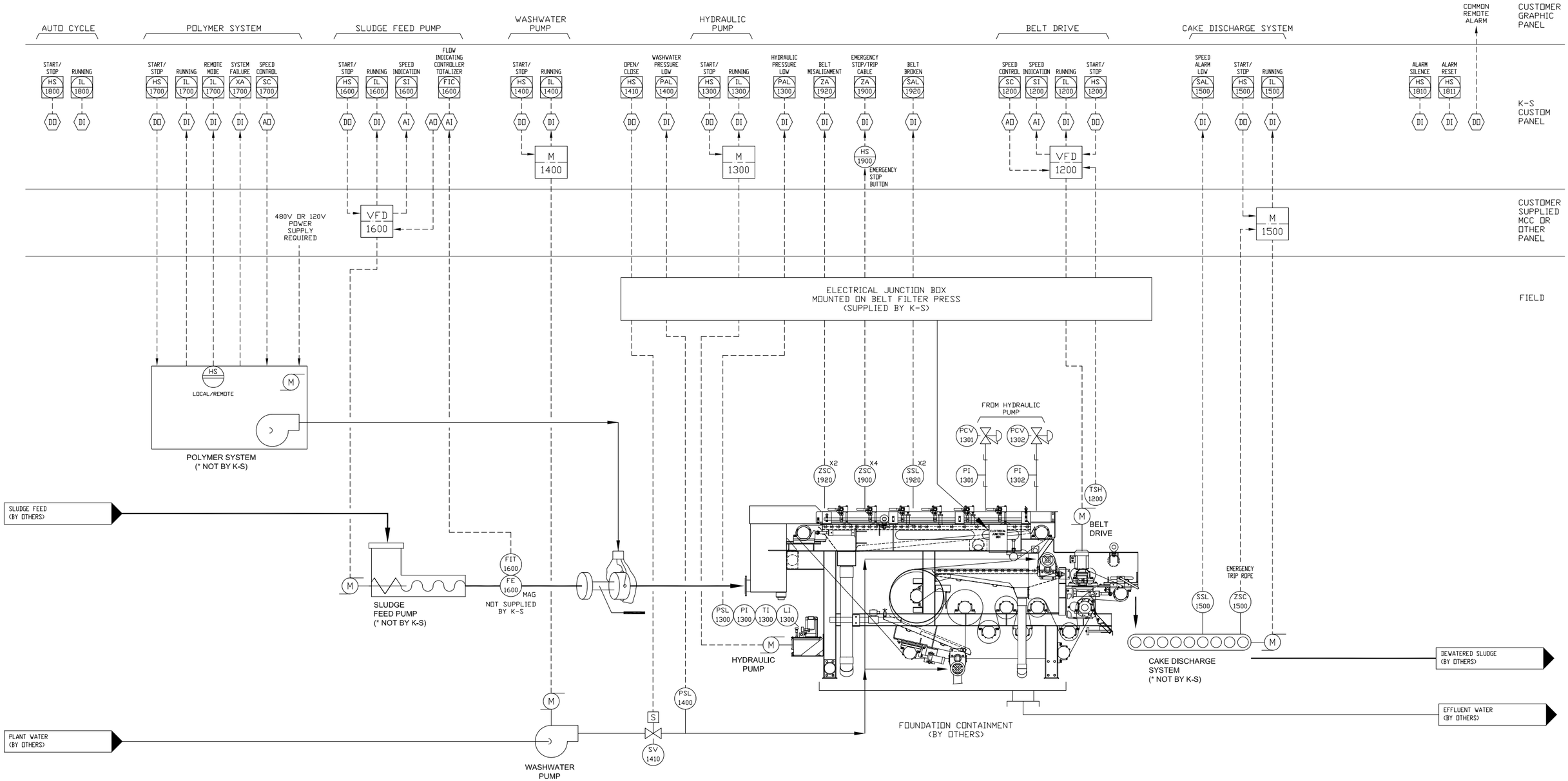

LEGEND

- PROCESS FLOW
- HYDRAULIC LINE
- ELECTRICAL SIGNAL

POLYMER INJECTION MANIFOLD AND RING

SYMBOLS

- M / XXX — MOTOR STARTER
- VFD / XXX — VARIABLE FREQUENCY DRIVE
- M — MOTOR
- S — SOLENOID VALVE
- XXX — FIELD MOUNTED DEVICE
- XXX — ENCLOSURE MOUNTED DEVICE
- XXX — LOCAL ENCLOSURE MOUNTED DEVICE
- PA / XXX — OPERATOR INTERFACE TERMINAL DEVICE
- XX — PROGRAMMABLE CONTROLLER INPUT/OUTPUT TYPE

NOTES:

1) * THESE ITEMS ARE NOT NORMALLY FURNISHED BY K-S, BUT SHOULD BE SIZED/DESIGNED PER THE K-S DESIGN MANUAL. THESE ITEMS CAN BE FURNISHED BY K-S.

THIS DRAWING IS THE PROPRIETARY PROPERTY OF KOMLINE-SANDERSON ENGINEERING CORPORATION. IT IS LOANED IN CONFIDENCE AND MUST BE RETURNED ON DEMAND. ANY USE DETRIMENTAL TO THE INTERESTS OF KOMLINE-SANDERSON ENGINEERING CORPORATION IS PROHIBITED. IT MUST NOT BE LOANED, COPIED OR REPRODUCED WITHOUT PERMISSION.

REV	DRWN	CHKD	DATE	APPR

TITLE: K-S BELT FILTER PRESS P & ID DIAGRAM (2-BELT MODEL)

CEL16 - - -

DESIGNED BY	DRAWN BY	CHECKED BY	APPROVED BY
RBS	RBS	-	-

DATE: 15-Nov-11

SCALE: NONE

KOMLINE-SANDERSON ENGINEERING CORPORATION
PEAPACK, NJ 07977 USA

REFERENCE:

DRAWING NO. CEL16-00155D REV -

SHT 1 OF 1

PRINT MAY BE REDUCED SIZE, DO NOT SCALE. ☐☐☐☐☐☐☐☐=ONE INCH(1")

01-JUL-02

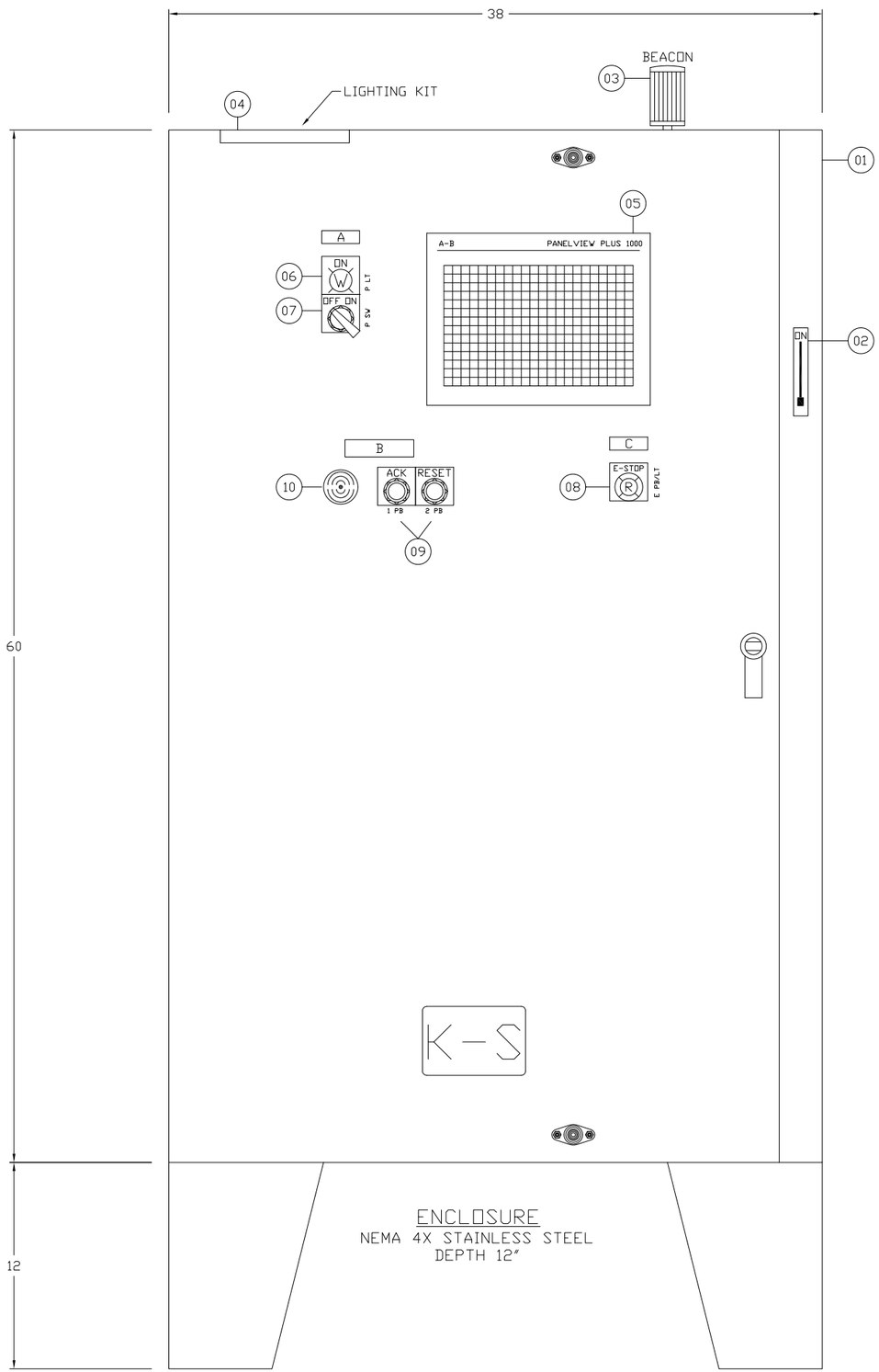

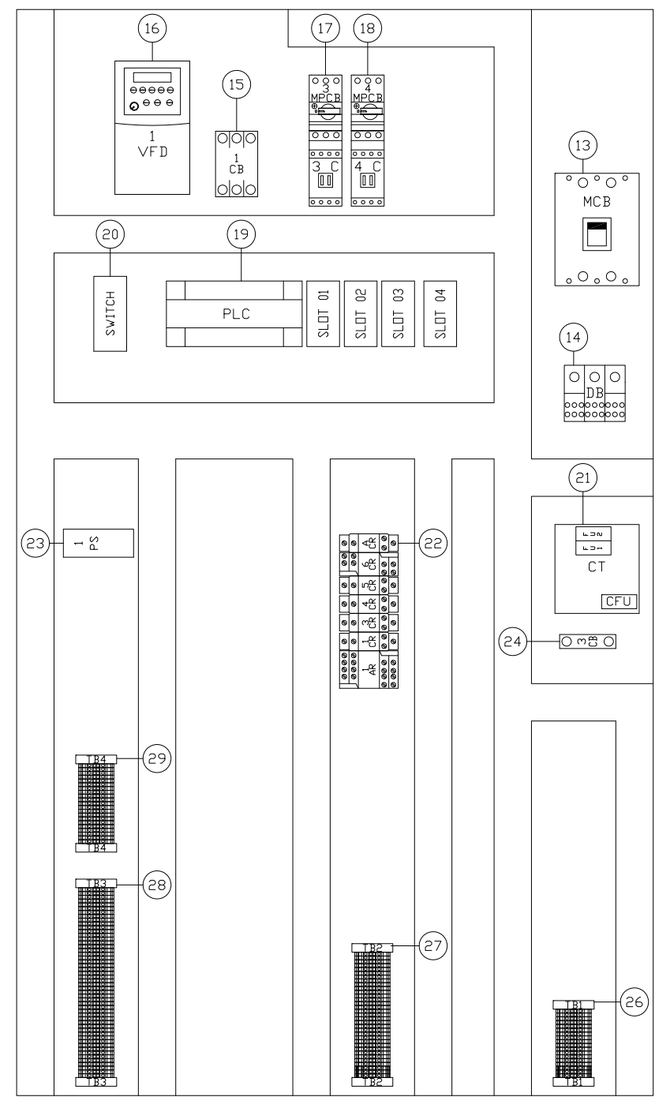

SUB-PANEL

ITEM	DESCRIPTION
01	ENCLOSURE, NEMA 4X 304 STAINLESS STEEL
02	CONTROL PANEL MAIN DISCONNECT
03	ALARM BEACON
04	INTERNAL LIGHTING KIT
05	OPERATOR INTERFACE TERMINAL
06	PILOT LIGHT, 120V AC, WHITE
07	SELECTOR SWITCH, 2 POSITION
08	EMERGENCY STOP BUTTON
09	PUSHBUTTON, MOMENTARY
10	ALARM HORN
11	
12	
13	MAIN CIRCUIT BREAKER
14	DISTRIBUTION BLOCK
15	BELT DRIVE CIRCUIT BREAKER
16	BELT DRIVE VARIABLE FREQUENCY DRIVE
17	HYDRAULIC PUMP MOTOR STARTER
18	WASHWATER PUMP MOTOR STARTER
19	PROGRAMMABLE LOGIC CONTROLLER
20	ETHERNET SWITCH
21	CONTROL TRANSFORMER
22	CONTROL RELAYS
23	POWER SUPPLY, 24V DC
24	CONTROL CIRCUIT BREAKER
25	
26	TERMINAL BLOCK, 480V AC
27	TERMINAL BLOCK, 120V AC
28	TERMINAL BLOCK, 24V DC
29	TERMINAL BLOCK, SIGNAL
30	
31	

NAMEPLATE LEGEND

A CONTROL POWER
B ALARM
C EMERGENCY STOP

REV | DRWN | CHKD | DATE | APPR
THIS DRAWING IS THE PROPRIETARY PROPERTY OF KOMLINE-SANDERSON ENGINEERING CORPORATION. IT IS LOANED IN CONFIDENCE AND MUST BE RETURNED ON DEMAND. ANY USE DETRIMENTAL TO THE INTERESTS OF KOMLINE-SANDERSON ENGINEERING CORPORATION IS PROHIBITED. IT MUST NOT BE LOANED, COPIED OR REPRODUCED WITHOUT PERMISSION.

TITLE
K-S BELT FILTER PRESS
CONTROL PANEL LAYOUT
(2-BELT MODEL)

CEL16
–
–
–

DESIGNED BY	DRAWN BY	CHECKED BY	APPROVED BY
–	RBS	–	–

DATE 15-Nov-11
SCALE 1=4

KOMLINE-SANDERSON
ENGINEERING CORPORATION
PEAPACK, NJ 07977 USA

REFERENCE:
DRAWING NO. CEL16-00156D
REV –
SHT 1 OF 1

PRINT MAY BE REDUCED SIZE, DO NOT SCALE. ☐☐☐☐☐☐☐☐=ONE INCH(1")

01-JUL-02

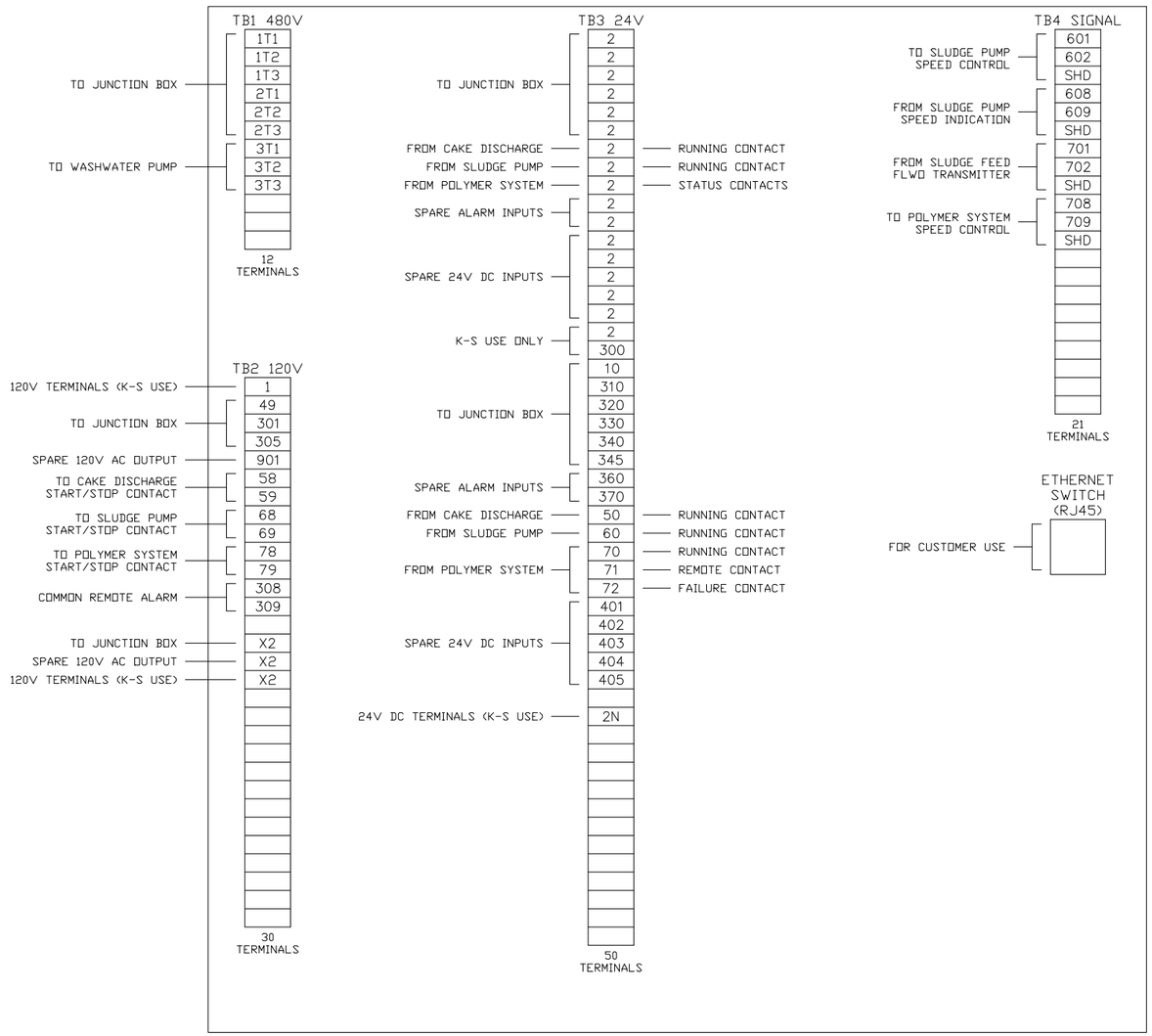

CONTROL PANEL TERMINALS

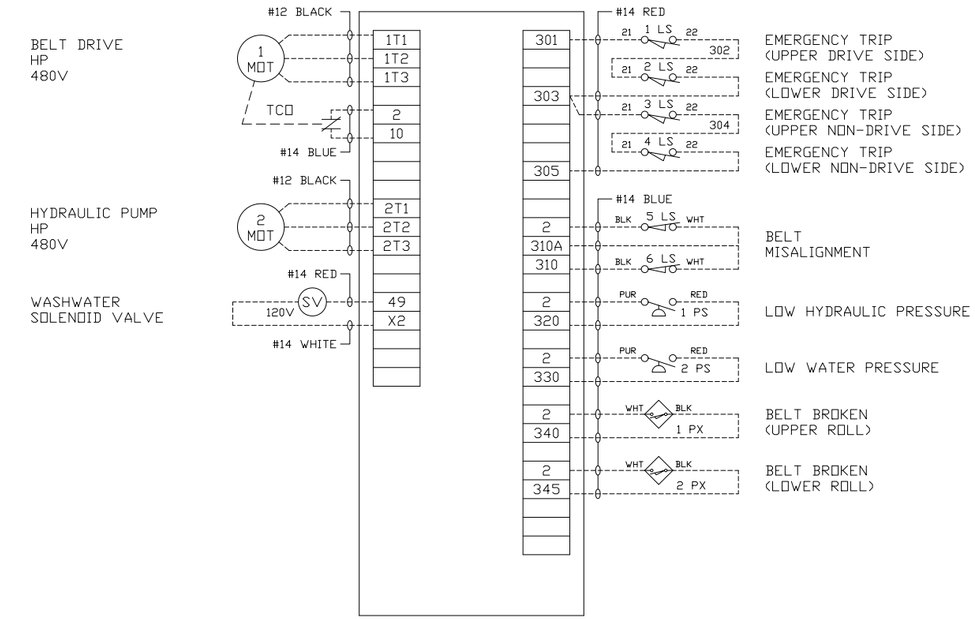

NEMA 4X STAINLESS STEEL
JUNCTION BOX MOUNTED ON KOMPRESS
(JUNCTION BOX PRE-WIRED BY K-S)

NOTES

1. INTERCONNECTING WIRING AND CONDUIT BETWEEN THE CONTROL PANEL AND THE JUNCTION BOX ARE NOT FURNISHED BY K-S. ALL CONDUIT SHOULD BE WATERTIGHT AND CORRISION RESISTANT (ROBROY PLASTI-BOND RED OR EQUAL).

2. ALL CONDUIT ENTRIES INTO JUNCTION BOX SHOULD BE MADE THROUGH THE BOTTOM OF JUNCTION BOX.

REV	DRWN	CHKD	DATE	APPR

THIS DRAWING IS THE PROPRIETARY PROPERTY OF KOMLINE-SANDERSON ENGINEERING CORPORATION. IT IS LOANED IN CONFIDENCE AND MUST BE RETURNED ON DEMAND. ANY USE DETRIMENTAL TO THE INTERESTS OF KOMLINE-SANDERSON ENGINEERING CORPORATION IS PROHIBITED. IT MUST NOT BE LOANED, COPIED OR REPRODUCED WITHOUT PERMISSION.

TITLE
K-S BELT FILTER PRESS
INTERCONNECTION DIAGRAM
(2-BELT MODEL)

CEL16
–
–
–

DESIGNED BY	DRAWN BY	CHECKED BY	APPROVED BY
–	RBS	–	–

DATE 15-Nov-11
SCALE NONE

KOMLINE-SANDERSON
ENGINEERING CORPORATION
PEAPACK, NJ 07977 USA

REFERENCE:
DRAWING NO. CEL16-00157D
REV –
SHT 1 OF 1

PRINT MAY BE REDUCED SIZE, DO NOT SCALE. ☐☐☐☐☐☐☐☐=ONE INCH(1")

01-JUL-02

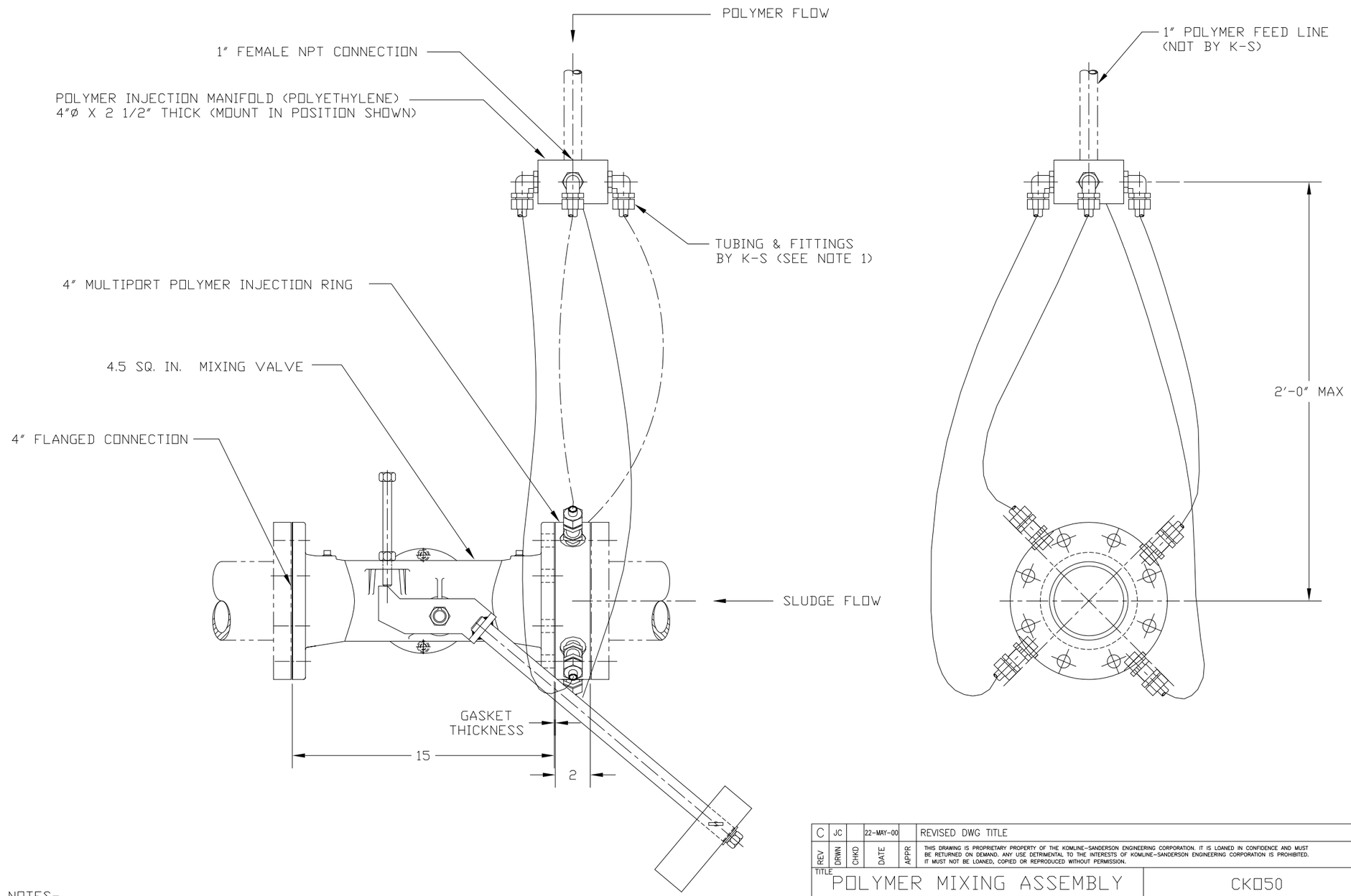

NOTES-

1. 10'-0" OF 1/2" 90 PSI POLYETHYLENE TUBING SUPPLIED.
2. FLANGED CONNECTIONS ARE 150# F.F. WITH BOLT HOLES STRADDLING CENTERLINES.

REV	DRWN	CHKD	DATE	APPR	
C	JC		22-MAY-00		REVISED DWG TITLE

THIS DRAWING IS PROPRIETARY PROPERTY OF THE KOMLINE-SANDERSON ENGINEERING CORPORATION. IT IS LOANED IN CONFIDENCE AND MUST BE RETURNED ON DEMAND. ANY USE DETRIMENTAL TO THE INTERESTS OF KOMLINE-SANDERSON ENGINEERING CORPORATION IS PROHIBITED. IT MUST NOT BE LOANED, COPIED OR REPRODUCED WITHOUT PERMISSION.

TITLE
POLYMER MIXING ASSEMBLY
4.5 SQ. IN. VALVE
4" END CONN. 316SS

CK050
-
-
-

DESIGNED BY	DRAWN BY	CHECKED BY	APPROVED BY
	PAC		

DATE 11-Apr-95

SCALE 1=4

KOMLINE-SANDERSON
ENGINEERING CORPORATION
PEAPACK, NJ 07977 USA

REFERENCE:

DRAWING NO. CK050-16130C

REV C

SHT 1 OF 1

PRINT MAY BE REDUCED SIZE, DO NOT SCALE. ☐☐☐☐☐☐☐☐☐☐=ONE INCH(1")

01-JUL-02

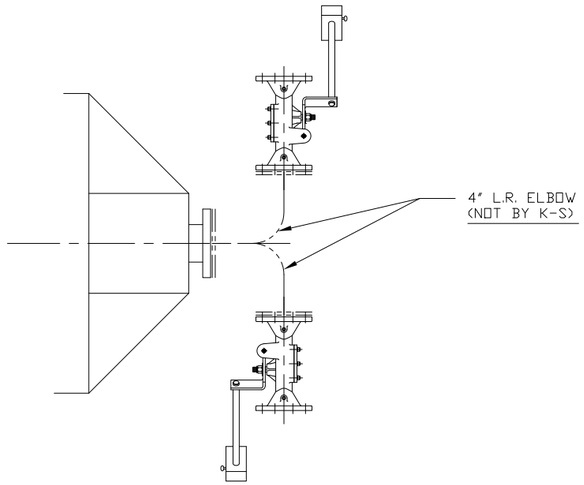

PLAN VIEW

OPTIONAL FEED ARRANGEMENTS

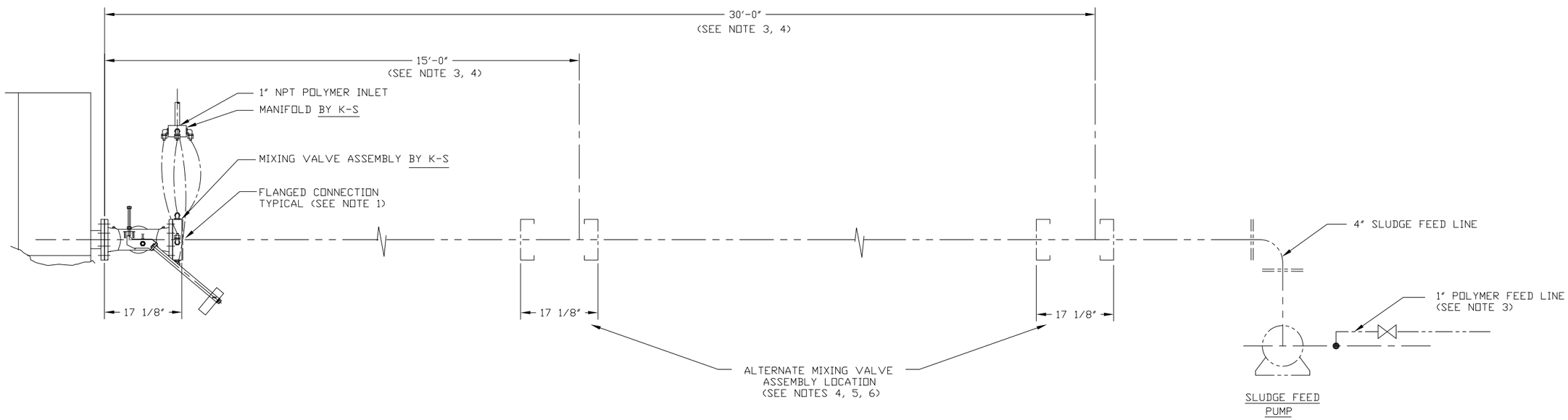

NOTES:

1. ALL PIPING AND VALVES HAVE 150# F.F. FLANGES (EXCEPT SLUDGE TANK HAS R.F. FLANGE) WITH BOLT HOLES STRADDLING CENTERLINES.
2. ALL PIPING SHOWN IN SCHEMATIC NOT BY K-S.
3. POLYMER FEED LINES MUST BE LOCATED AT POSITIONS SHOWN.
4. REMOVABLE SPOOL PIECES MUST BE FURNISHED AS CLOSE AS POSSIBLE TO ALTERNATE LOCATIONS SHOWN.
5. FOR POLYMER MIXING ASSEMBLY AND SLUDGE FEED LINE SIZE, SEE DWG. CK050-16130C.
6. DRAWING IS SCHEMATIC ONLY. MIXING VALVE AND INJECTION RING MUST BE INSTALLED HORIZONTALLY.
7. ANY EXCEPTIONS MUST BE APPROVED BY KOMLINE-SANDERSON KOMPRESS PRODUCT MANAGER.
8. DRAINS WITH VALVES SHOULD BE INSTALLED IN LOW POINTS OF FEED LINE FOR FULL DRAINAGE.
9. CUSTOMER TO FIELD SUPPORT VALVES & PIPING. DO NOT HANG VALVES & PIPING FROM PRESS.

FOR USE WITH
1.0M PRESS
(4" INLET)

REV	DRWN	CHKD	DATE	APPR	
C	JC		22-MAY-00		REVISED DWG TITLE

THIS DRAWING IS THE PROPRIETARY PROPERTY OF KOMLINE-SANDERSON ENGINEERING CORPORATION. IT IS LOANED IN CONFIDENCE AND MUST BE RETURNED ON DEMAND. ANY USE DETRIMENTAL TO THE INTERESTS OF KOMLINE-SANDERSON ENGINEERING CORPORATION IS PROHIBITED. IT MUST NOT BE LOANED, COPIED OR REPRODUCED WITHOUT PERMISSION.

TITLE: SLUDGE AND POLYMER FEED ARRANGEMENT-4" 4.5 SQ. IN. 316SS VALVE

CK050
-
-
-

DESIGNED BY	DRAWN BY	CHECKED BY	APPROVED BY
	PAC		

DATE: 12-Apr-95

SCALE: 1=12

KOMLINE-SANDERSON
ENGINEERING CORPORATION
PEAPACK, NJ 07977 USA

REFERENCE:

DRAWING NO.: CK050-16132D

REV: C

SHT 1 OF 1

PRINT MAY BE REDUCED SIZE, DO NOT SCALE. ☐☐☐☐☐☐☐☐=ONE INCH(1")

01-JUL-02

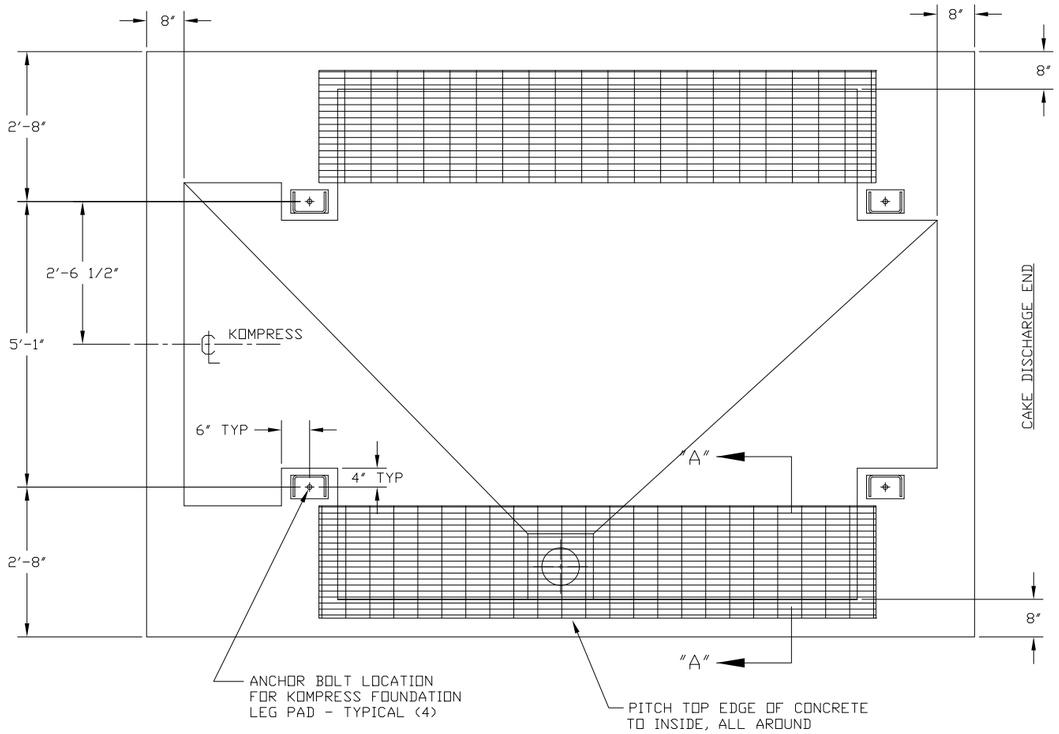

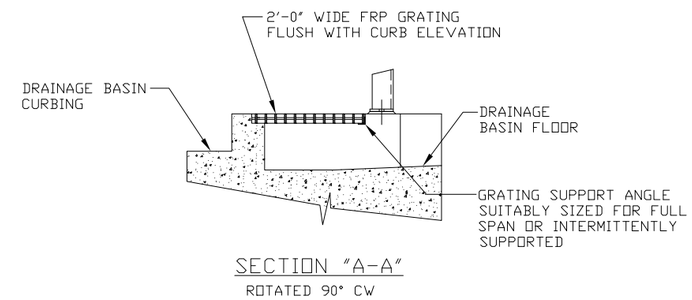

GRATING INSTALLATION DETAILS

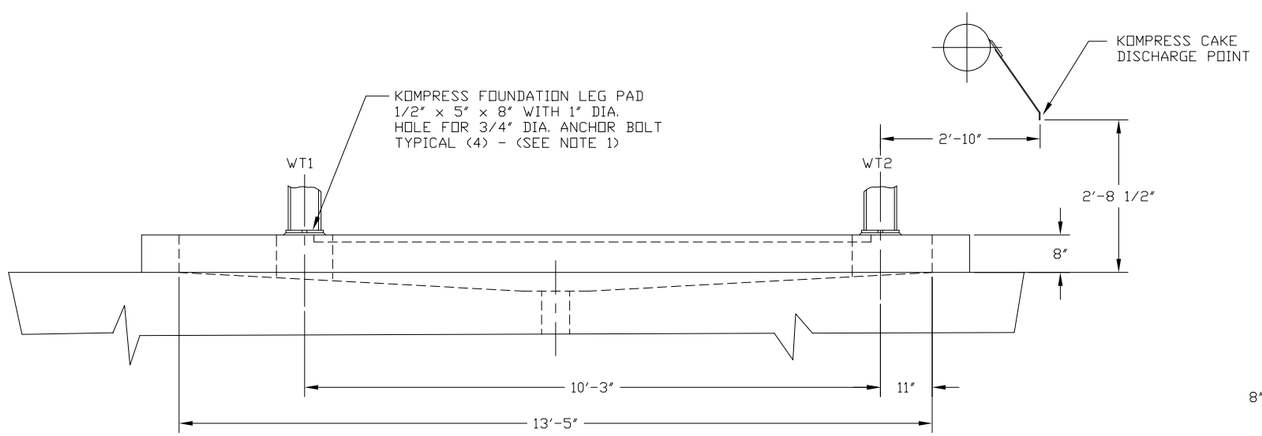

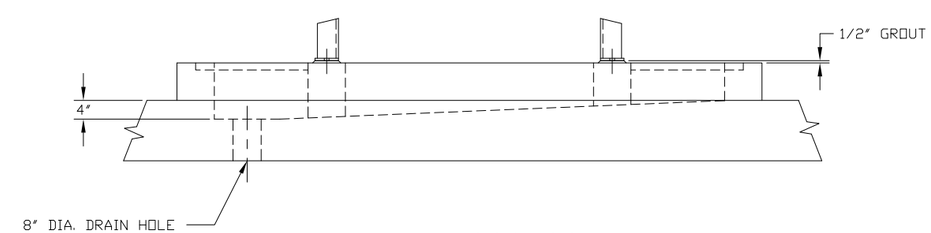

NOTES:

1 - 3/4" DIA. ANCHOR BOLTS TO PROJECT 2-1/4" ABOVE FOUNDATION PLATE. (NOT BY K-S UNLESS SPECIFIED).
2 - TOLERANCE ON ALL ANCHOR BOLT DIMENSIONS IS ± 1/8" MAX.; DIAGONAL MEASUREMENT DIFFERENTIAL IS 1/4".
3 - CONCRETE FOUNDATION SHOWN IS SUGGESTED ONLY AND NOT FURNISHED BY K-S NOR IS IT INTENDED TO CONFLICT WITH THE ENGINEER'S DRAWINGS.
4 - CUSTOMER INSTALLED GRATING IS RECOMMENDED BETWEEN SIDES OF PRESS AND BASIN CURBING.

REV	DRWN	CHKD	DATE	APPR

THIS DRAWING IS THE PROPRIETARY PROPERTY OF KOMLINE-SANDERSON ENGINEERING CORPORATION. IT IS LOANED IN CONFIDENCE AND MUST BE RETURNED ON DEMAND. ANY USE DETRIMENTAL TO THE INTERESTS OF KOMLINE-SANDERSON ENGINEERING CORPORATION IS PROHIBITED. IT MUST NOT BE LOANED, COPIED OR REPRODUCED WITHOUT PERMISSION.

TITLE
KOMPRESS FOUNDATION PLAN
AND ANCHOR BOLT LAYOUT
MODEL GRS-1 SERIES III

CK065
-
-
-

DESIGNED BY	DRAWN BY	CHECKED BY	APPROVED BY
-	JC	-	-

DATE 14-Feb-98
SCALE 1=16

KOMLINE-SANDERSON
ENGINEERING CORPORATION
PEAPACK, NJ 07977 USA

REFERENCE:
DRAWING NO. CK065-10008D
REV
SHT 1 OF 1

PRINT MAY BE REDUCED SIZE, DO NOT SCALE. ☐☐☐☐☐☐☐☐=ONE INCH(1")

01-JUL-02

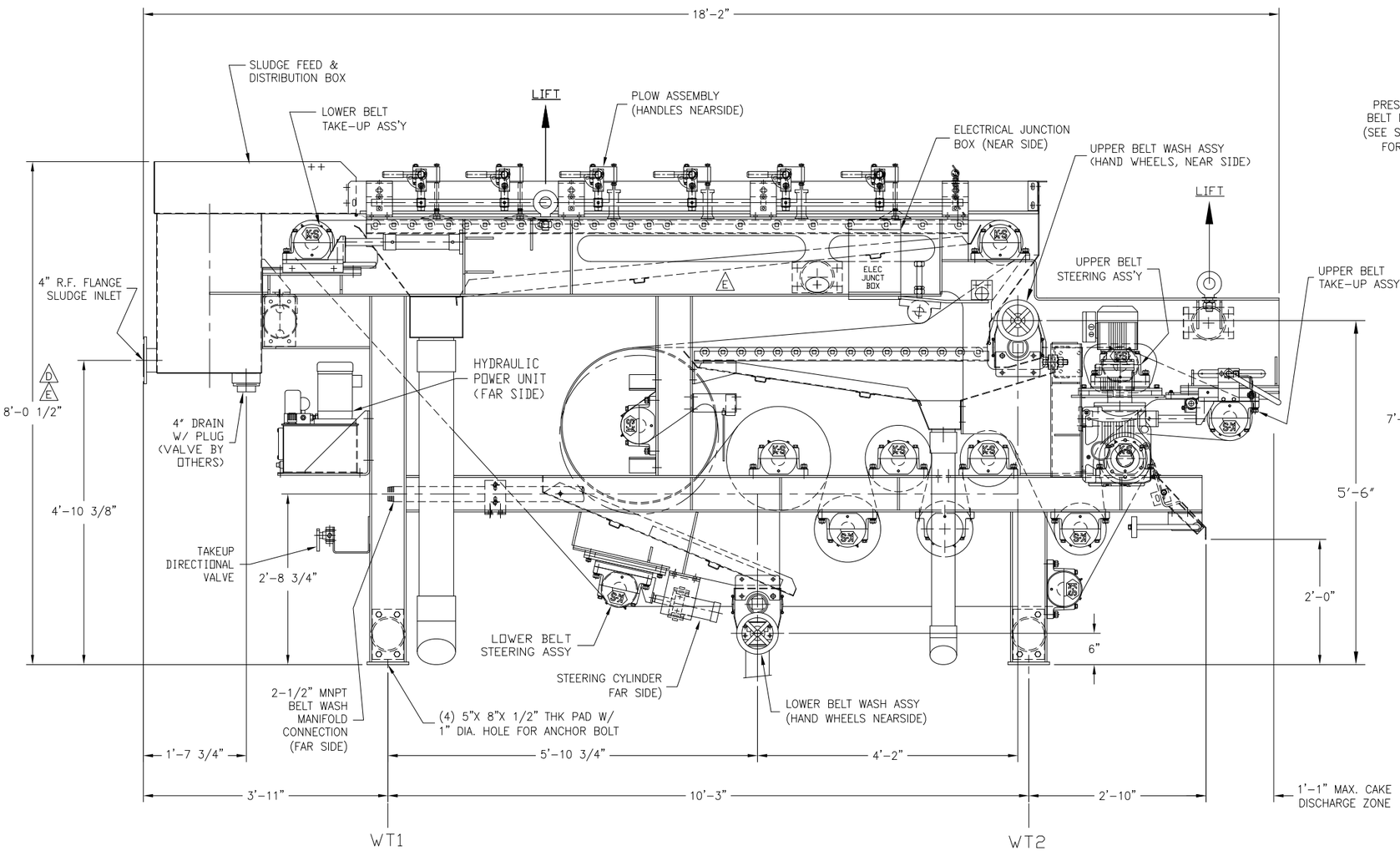

ELEVATION
(R.H. UNIT AS SHOWN)

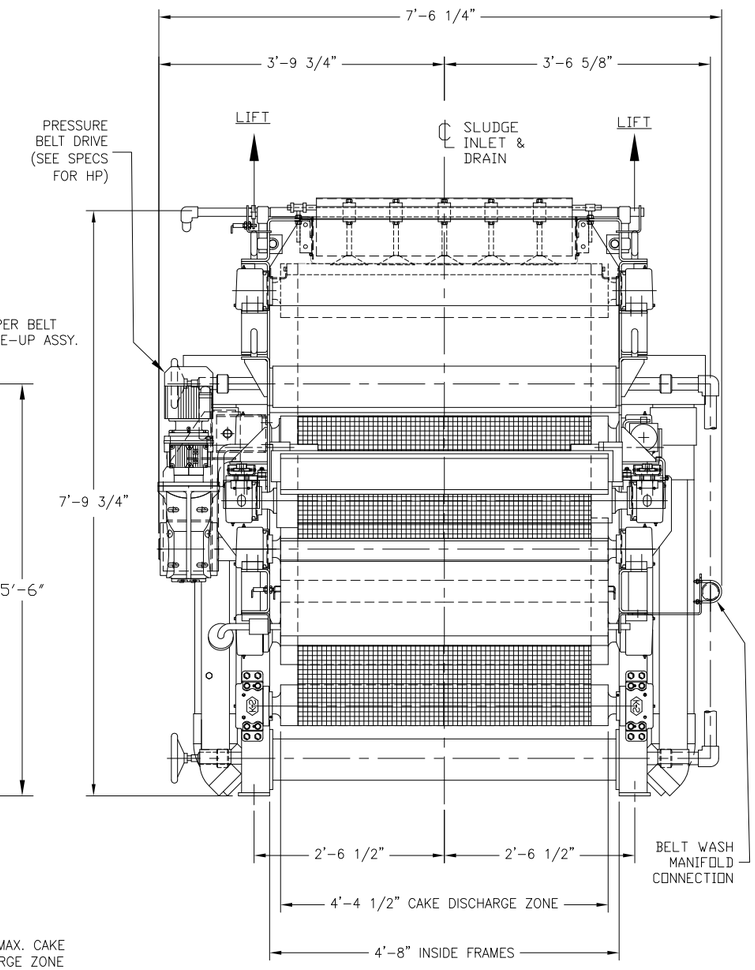

DISCHARGE END VIEW

NOTES:

1. CUSTOMER TO FIELD SUPPORT PIPING: DO NOT HANG PIPING FROM PRESS.
2. SEE CERTIFIED SPECIFICATIONS FOR BELT WASH WATER REQUIREMENTS.
3. CUSTOMER TO SUPPLY SHUT-OFF VALVE FOR WASH WATER SYSTEM TO ISOLATE PRESS.
4. ANCHOR BOLTS NOT SUPPLIED UNLESS LISTED IN CERTIFIED SPECIFICATIONS.
5. FLANGED CONNECTION: 150 LB. RAISED FACE, STD ASA DRILLING.
6. ALL WEIGHTS ARE APPROXIMATE, LOADED WEIGHT SHOWN (WT1 ETC.) IS TOTAL WEIGHT ON LEG AT POINT INDICATED.
7. FOR SUGGESTED FOUNDATION & ANCHOR BOLT PLAN REFER TO DWG. #CK065-10008D.
8. SEE SHEET 2 FOR PLAN VIEW.

NET WT.	LOADED GROSS WT.	LOADED WT1 NEAR SIDE	LOADED WT1 FAR SIDE	LOADED WT2 NEAR SIDE	LOADED WT2 FAR SIDE
14,000 LBS.	14,700 LBS	2,600 LBS	2,600 LBS	4,750 LBS	4,750 LBS

REV	DRWN	CHKD	DATE	APPR	
E	FRL		12-Nov-09		REMOVE AIR CONTROL PANEL & NOTES.
D	FRL		16-Feb-08		GENERAL UPDATES: SINGLE-ROLL DRIVE, BELT WASH PIPING, NEW DOCUMENT TYPE
C	PAC		10/30/00		UPDATED PLOW ASSEMBLY; 8'-0" WAS 8'-5 1/4"
B	PAC		5/8/00		REVISED PLOW QUANTITY

THIS DRAWING IS THE PROPRIETARY PROPERTY OF KOMLINE-SANDERSON ENGINEERING CORPORATION. IT IS LOANED IN CONFIDENCE AND MUST BE RETURNED ON DEMAND. ANY USE DETRIMENTAL TO THE INTERESTS OF KOMLINE-SANDERSON ENGINEERING CORPORATION IS PROHIBITED. IT MUST NOT BE LOANED, COPIED OR REPRODUCED WITHOUT PERMISSION.

TITLE
KOMPRESS
MODEL GRS-1M SERIES III
HYDRAULIC T/U & STEERING

CK065
-
-
-

DESIGNED BY	DRAWN BY	CHECKED BY	APPROVED BY
-	JC	-	-

DATE 19-Nov-97
SCALE 1=12

KOMLINE-SANDERSON
ENGINEERING CORPORATION
PEAPACK, NJ 07977 USA

REFERENCE:
DRAWING NO. CK065-10018D
REV E
SHT 1 OF 2

PRINT MAY BE REDUCED SIZE, DO NOT SCALE. ☐☐☐☐☐☐☐☐=ONE INCH(1")

01-JUL-02

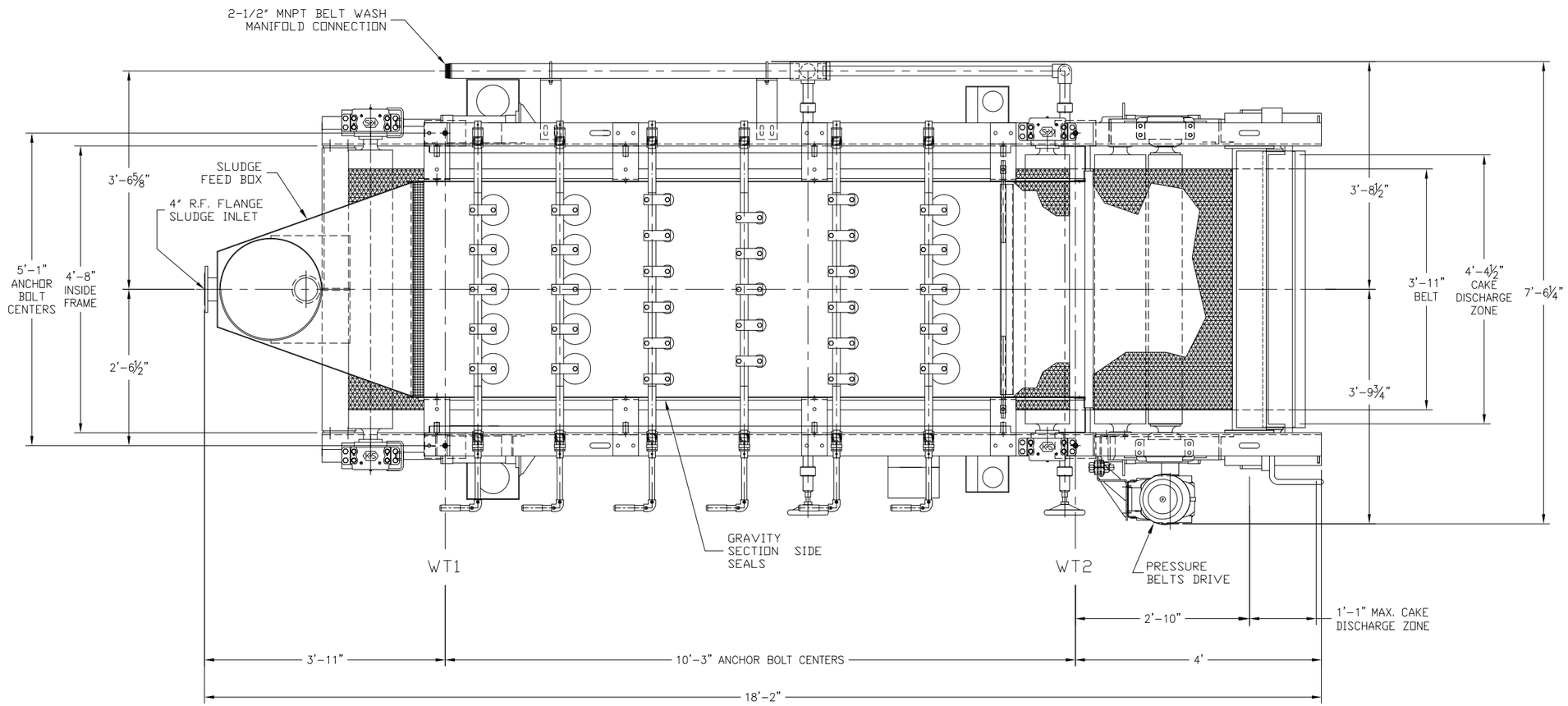

PLAN VIEW
(R. H. UNIT AS SHOWN)

SEE SHEET 1 FOR REVISON NOTES.

REV	DRWN	CHKD	DATE	APPR

THIS DRAWING IS THE PROPRIETARY PROPERTY OF KOMLINE-SANDERSON ENGINEERING CORPORATION. IT IS LOANED IN CONFIDENCE AND MUST BE RETURNED ON DEMAND. ANY USE DETRIMENTAL TO THE INTERESTS OF KOMLINE-SANDERSON ENGINEERING CORPORATION IS PROHIBITED. IT MUST NOT BE LOANED, COPIED OR REPRODUCED WITHOUT PERMISSION.

TITLE
KOMPRESS
MODEL GRS-1M SERIES III
HYDRAULIC T/U & STEERING

CK065
-
-
-

DESIGNED BY	DRAWN BY	CHECKED BY	APPROVED BY
	JC		

DATE 19-Nov-97
SCALE 1=12

KOMLINE-SANDERSON
ENGINEERING CORPORATION
PEAPACK, NJ 07977 USA

REFERENCE:
DRAWING NO. CK065-10018D
REV E
SHT 2 OF 2

PRINT MAY BE REDUCED SIZE, DO NOT SCALE. □□□□□□□□=ONE INCH(1")

01-JUL-02

Andritz Sludge Dewatering

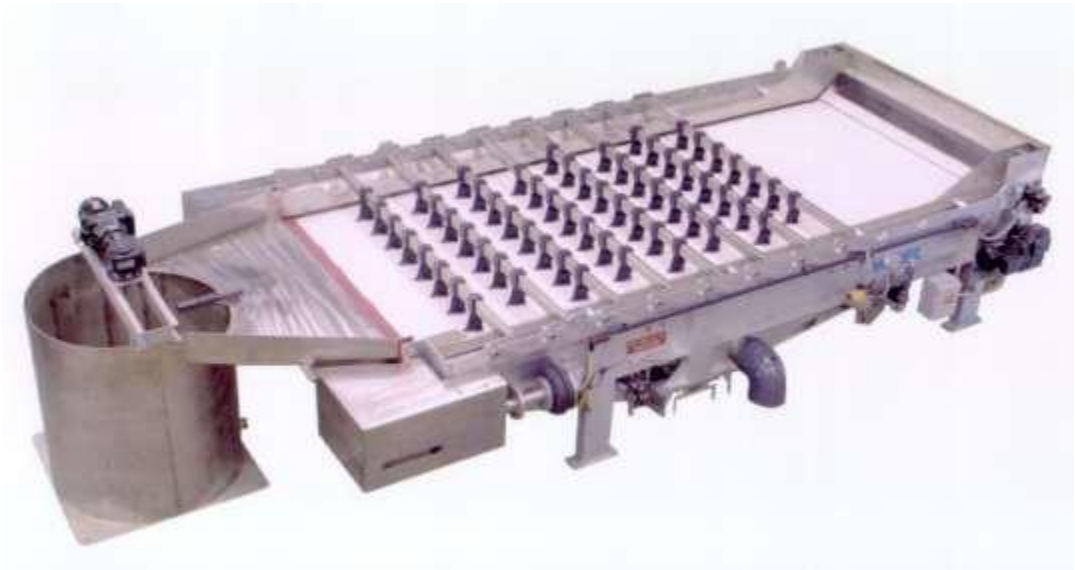

Andritz Budgetary Information 1228588-1

Andritz Budgetary Information

For

JENNIFER SHORE

HDR Engineering Inc.
Water|Wastewater EIT

2121 N. California Blvd. Suite 475 | Walnut Creek , CA 94596
925.974.2519
jennifer.shore@hdrinc.com | hdrinc.com

Recycle today for a better tomorrow

Project

Pinole WPCP

Andritz Separation Inc. Local Representative:
MISCOwater-Mike Tooley
925-225-1900
mtooley@miscowater.com

This proposal is the confidential and proprietary information of Andritz Separation Inc. Any party accepting receipt of this proposal does so on the express understanding and agreement that it will neither copy, reproduce, disclose to third parties or use this proposal for any purpose other than those expressly agreed to by Andritz Separation Inc. in writing. Such party also agrees to indemnify of Andritz Separation Inc. against losses or damager suffered by of Andritz Separation Inc. as a result of such parties' improper reproduction, disclosure or use of this proposal.

Table of Contents

I. Cover Letter

II. Andritz Proposal Conditions

- A. Design Criteria
- B. Equipment Recommendation & Performance
- C. Scope of Supply
- D. Pricing Summary
- E. Commercial Conditions

III. Equipment Specs/Drawings

1228588-1

November 05,2012

HDR Engineering Inc.
2121 N. California Blvd. Suite 475
Walnut Creek , CA 94596

Attention:**JENNIFER SHORE**

Subject: Pinole WWTP

Dear Ms. Shore

Please find enclosed our pricing, technical specifications and drawings of the ***Andritz*** gravity belt thickener (GBT) that will further describe our dewatering system and its features.

The ***Andritz*** GBT is the most time proven technology for this type application, as well as the most cost effective. The unit offers low connected horsepower and low cost of ownership in terms of polymer consumption. However, as you review the specifications and compare our equipment to other more price competitive suppliers, please keep in mind the following:

- Frame size and moment of inertia
- B-10 bearing life
- Pneumatic belt tension and tracking; Pulp and paper quality (continuous, not proportional)
- Pneumatic control

The above are just a few of the many features that have made the ***Andritz*** GBT the thickening technology of choice in today's market, and another important feature is the robust design of the unit.

Once again, we thank you for your time and interest in Andritz dewatering technology and look forward to working with you on the Longmont project.

Sincerely,
Andritz Separation, Inc.

Bruce SoRelle
Western Regional Manager

Andritz Inquiry 1228588-1

To

Pinole WPCP

November 5,2012

A. Design Criteria

1.	Type of Sludge	Primary / WAS Blend
2.	Inlet Consistency	1.0% Estimated
3.	Flow Rate	350 GPM/ Meter
4.	Desired Cake Solids	5 .0% DS

*B. Equipment Layout & Guaranteed Performance**

1.	Type of Pre-Thickening Equipment	**1.0 meter GBT**
2.	Number of Units	One (1)
3.	Active Polymer Dosage	10-18 lbs/T DS Estimated
4.	Flow Capacity	350 GPM
5.	Expected Cake Solids	5 % DS

NOTE:
All performance guarantees are based upon the various sludge samples testing conducted on various samples from the

C. General Scope of Supply

ITEM #	# REQ ' D	DESCRIPTION
1.	1 each	**Andritz 1.0 meter Gravity Belt Thickener** including: • Per Andritz Standard Specification Attached
2.	1 each	**Pneumatic Panel for Gravity Belt Thickener** Per Specification
3.	1 lot	**Basic Engineering and Documentation** includes: • Arrangement drawings with dimensions for the Andritz scope • Foundation drawings showing details needed for building work • Flow sheet for sludge, polymer, and utilities showing equipment, pipes, and control loops as well as technological quantities • Motor list • Written sequence of operation including all interlocks • Electrical and pneumatic schematics • Terminal wiring details • Erection, operating and maintenance manuals • Part manuals
4.	1 ea	**Air Compressor**
5.	1 ea	**Washwater Booster Pump**

D. Pricing Summary

Item #	Description	Price /EA.$ (USD)	Price Total $ (USD)
1 - 11	Two (2) 1.0 meter Andritz Gravity Table.....	$ 165,000	$330,000.00
TOTAL PRICE			**$330,000.00**

E. Commercial Conditions

Terms and Conditions

This price proposal is based on the attached Andritz Separation, Inc. “Standard Terms and Conditions of Sale”.

Special Information

- Price quoted includes freight to jobsite
- Prices do not include any unloading or any applicable fees or taxes (Local, Federal, or Final Destination).
- Quotation is valid for ninety (90) days.
- All prices quoted in U.S. dollars.

Terms of Payment, 30 Days Net

- 15% of contract value with receipt of acknowledged copy of purchase order
- 20% of contract value with60 days after order
- 55% of equipment value upon notice of readiness of shipment
- 10% of contract value upon performance acceptance, not to exceed 90 days from the date of delivery.

Approval and Certified Drawings

The package that constitutes “Drawings for Approval and Certified Drawings” is comprised of the following. For invoicing purposes, this list is complete. However, additional drawings may be submitted, but not considered part of the “Approval” process.

• Foundation drawing
• Connection details (piping)
• Pneumatic/electric schematic, panel layouts

Approval drawings will be shipped approximately 4 - 6 weeks after receipt of purchase order. Certified drawings will be shipped approximately 2 weeks after receipt of approval drawings.

Shipment

ANDRITZ shipment is 18-20 weeks from receipt of order.

Engineering

Following are the major engineering services provided by Andritz with this Contract:

a). General arrangement drawings of equipment supplied by Andritz designed for installation;

b). Material balance information required for sizing of process control instrumentation;

c). Machine outline drawings, complete with piping and writing requirement;

d). Electrical and pneumatic panel and wiring drawings, if provided by Andritz;

e). Operating and maintenance manuals, including spare parts lists;

f). Motor and drive list;

g). Sequence of operation.

Project Management

Andritz will appoint a Project Manager for the duration of the contract. Project Management services are included in this package and are as follows:

a). Production of a complete critical path project schedule for ANDRITZ equipment;

b). Coordinate with the customer's Engineering and Andritz Engineering on system design and drawing schedule commitments;

c). Coordinate with manufacturing on material procurement and construction to ensure ANDRITZ commitments are maintained.

Erection, Training, and Start-Up Assistant

ANDRITZ will provide additional erection and start-up supervision for which the purchaser shall pay $1,100.00/day (US) plus expenses, eight (8) hours/day.

At the request of the Purchaser, overtime service will be provided at a rate of 1.5 times quoted rates for weekdays and 2.0 times quoted rates for weekends.

Expenses are defined as the cost of travel from Seller's plant to the point of installation and return, together with all living expenses during the period of service.

The above charges shall be made for time involved including delays which are beyond the Seller's control.

Equipment Standard

Any deviations from the ANDRITZ standard mechanical and electrical specification, which are not the owner's preference, must be further discussed. Refer to the Andritz standard specifications enclosed.

Supplies and Services NOT Included in this Quotation :

Specifically the ANDRITZ scope of supply does NOT include the following items as may be necessary for equipment installation & operation to the performance levels specified:

- civil engineering, design & supply of structural steel & concrete as needed for support of the ANDRITZ supplied equipment,
- polymer, flocculation systems, piping, controls etc.,
- slurry pumps, piping, valves, nor controls nor indication of flows,
- structural steel supports for Gravity Table, or any associated walkways, handrails, stairs, ladders, etc., as will be required to service and operate the Gravity Table,
- MCC high voltage bus, field wiring, diagrams, etc.,
- piping, hoses, clamps, fittings, stands, etc. to shower pipes of ANDRITZ machines,
- drain hoses, pipes, clamps, fittings, etc. from ANDRITZ machines,
- instrumentation, flow, level nor pressure measurement devices for slurry, polymer water or air supply lines to the sludge dewatering equipment, or panels,
- SAMA diagrams, instrument lists, specifications nor selection criteria for instruments nor sensors,
- valves, piping fittings, elbows, hangers, straps, clamps, hoses, etc.,
- LIC, FIC, SIC, PID nor any process related type measuring instruments,
- field installation, tools, labor nor materials or tools to do same,
- field wiring, conduit, labor, etc. nor materials or tools to do same,
- maintenance tools, jigs, fixtures, etc. as required to service machine,
- lubricants, applicators, oilers, filters, etc. nor equipment to service machine

ANDRITZ SEPARATION INC. STANDARD TERMS AND CONDITIONS OF SALE

1. TERMS APPLICABLE

The Terms and Conditions of Sale listed below are the exclusive terms and conditions applicable to quotations made and orders acknowledged by the ANDRITZ entity supplying the same ("Seller") for the sales of products, equipment and parts relating thereto ("Products"). If this quotation or acknowledgment contains terms additional to or different from those offered by Buyer, then any acceptance by Seller is expressly made conditional upon Buyer's assent to such additional or different terms. Any of Buyer's terms and conditions that are in addition to or different from those contained herein, which are not separately agreed to by Seller in writing, are hereby objected to and shall be of no effect. [The term "this Agreement" as used herein means this quotation or acknowledgment or purchase order, together with any attachment hereto, any documents expressly incorporated by reference and these Terms and Conditions of Sale.

2. DELIVERY

Delivery dates are good faith estimates and do not mean that "time is of the essence." Buyer's failure to promptly make advance or interim payments, supply technical information, drawings and approvals will result in a commensurate delay in delivery. Upon and after delivery, risk of loss or damage to the Products shall be Buyer's. Delivery of the Products hereunder will be made on the terms agreed to by the parties as set forth in this Agreement, according to INCOTERMS 2010.

3. WARRANTY

(a) Seller warrants to Buyer that the Products manufactured by it will be delivered free from defects in material and workmanship. This warranty shall commence upon delivery of the Products and shall expire on the earlier to occur of 12 months from initial operation of the Products and 18 months from delivery thereof (the "Warranty Period"). If during the Warranty Period Buyer discovers a defect in material or workmanship of a Product and gives Seller written notice thereof within 10 days of such discovery, Seller will, at its option, either deliver to Buyer, on the same terms as the original delivery was made, according to INCOTERMS 2010, a replacement part or repair the defect in place. Any repair or replacement part furnish pursuant to this warranty are warranted against defects in material and workmanship for one period of 12 months from completion of such repair or replacement, with no further extension. Seller will have no warranty obligations for the Products under this paragraph 3(a): (i) if the Products have not been operated and maintained in accordance with generally approved industry practice and with Seller's specific written instructions; (ii) if the Products are used in connection with any mixture or substance or operating condition other than that for which they were designed; (iii) if Buyer fails to give Seller such written 10 day notice; (iv) if the Products are repaired by someone other than Seller or have been intentionally or accidentally damaged; (v) for corrosion, erosion, ordinary wear and tear or in respect of any parts which by their nature are exposed to severe wear and tear or are considered expendable; or (vi) for expenses incurred for work in connection with the removal of the defective articles and reinstallation following repair or replacement.

(b) Seller further warrants to Buyer that at delivery, the Products manufactured by it will be free of any liens or encumbrances. If there are any such liens or encumbrances, Seller will cause them to be discharged promptly after notification from Buyer of their existence.

(c) THE EXPRESS WARRANTIES SELLER MAKES IN THIS PARAGRAPH 3 ARE THE ONLY WARRANTIES IT WILL MAKE. THERE ARE NO OTHER WARRANTIES, WHETHER STATUTORY, ORAL, EXPRESS OR IMPLIED. IN PARTICULAR, THERE ARE NO IMPLIED WARRANTIES OF MERCHANTABILITY OR FITNESS FOR A PARTICULAR PURPOSE.

(d) The remedies provided in paragraphs 3(a) and 3(b) are Buyer's exclusive remedy for breach of warranty.

(e) With respect to any Product or part thereof not manufactured by Seller, Seller shall pass on to Buyer only those warranties made to Seller by the manufacturer of such Product or part which are capable of being so passed on.

4. LIMITATION OF LIABILITY

Notwithstanding any other provision in this Agreement, the following limitations of liability shall apply:

(a) In no event, whether based on contract, tort (including negligence), strict liability or otherwise, shall Seller, its officers, directors, employees, subcontractors, suppliers or affiliated companies be liable to Buyer or any third party for loss of profits, revenue or business opportunity, loss by reason of shutdown of facilities or inability to operate any facility at full capacity, or cost of obtaining other means for performing the functions performed by the Products, loss of future contracts, claims of customers, cost of money or loss of use of capital, in each case whether or not foreseeable, or for any indirect, special, incidental or consequential damages of any nature.

(b) The aggregate liability of Seller, its officers, directors, employees, subcontractors, suppliers or affiliated companies, for all claims of any kind for any loss, damage, or expense resulting from, arising out of or connected with the Products or this Agreement or from the performance or breach thereof, together with the cost of performing make good obligations to pass performance tests, if applicable, shall in no event exceed the contract price. The foregoing not withstanding, if applicable, any claims for (a) delay in delivery shall not exceed 5% and (b) breach of performance guarantees shall not exceed 15% of the order price.

(c) The limitations and exclusions of liability set forth in this paragraph 4 shall take precedence over any other provision of this Agreement and shall apply whether the claim of liability is based on contract, warranty, tort (including negligence), strict liability, indemnity, or otherwise. The remedies provided in this Agreement are Buyer's exclusive remedies.

(d) All liability of Seller, its officers, directors, employees, subcontractors, suppliers or affiliated companies, resulting from, arising out of or connected with the Products or this Agreement or from the performance or breach thereof shall terminate on the third anniversary of the date of this Agreement.

5. CHANGES, DELETIONS AND EXTRA WORK

Seller will not make changes in the Products unless Buyer and Seller have executed a written Change Order for such change. Any such Change Order will include an appropriate adjustment to the contract price and delivery terms. If the change impairs Seller's ability to satisfy any of its obligations to Buyer, the Change Order will include appropriate modifications to this Agreement. If, after the date of this quotation or acknowledgment, new or revised governmental requirements should require a change in the Products, the change will be subject to this paragraph 5.

6. TAXES

Seller's prices do not include any sales, use, excise or other taxes. In addition to the price specified herein, the amount of any present or future sales, use, excise or other tax applicable to the sale or use of the Products shall be billed to and paid by Buyer unless Buyer provides to Seller a tax-exemption certificate acceptable to the relevant taxing authorities.

7. SECURITY INTEREST

Seller shall retain a purchase money security interest and Buyer hereby grants Seller a lien upon and security interest in the Products until all payments hereunder have been made in full. Buyer acknowledges that Seller may file a financing statement or comparable document as required by applicable law and may take all other action it deems reasonably necessary to perfect and maintain such security interest in Seller and to protect Seller's interest in the Products.

8. SET OFF

Neither Buyer nor any of its affiliates shall have any right to set off claims against Seller or any of its affiliates for amounts owed under this Agreement or otherwise.

9. PATENTS

Unless the Products or any part thereof are designed to Buyer's specifications and provided the Product or any part thereof is not used in any manner other than as specified or approved by Seller in writing, (i) Seller shall defend against any suit or proceeding brought against Buyer to the extent based on a claim that any Product, or any part thereof, infringes any United States device patent; provided Seller is notified

promptly in writing and given the necessary authority, information and assistance for the defense of such suit or proceeding; (ii) Seller shall satisfy any judgment for damages entered against Buyer in such suit; and (iii) if such judgment enjoins Buyer from using any product or a part thereof, then Seller shall, at its option: (a) obtain for Buyer the right to continue using such Product or part; (b) eliminate the infringement by replacing or modifying all or part of the Products; or (c) take back such Product or part and refund to Buyer all payments on the purchase price which Seller has received, in which case neither Buyer nor Seller will have any claim against the other under this Agreement or arising out of the subject matter of this Agreement. The foregoing states Seller's entire liability for patent infringement by any Product or part thereof.

10. SOFTWARE LICENSE, WARRANTY, FEES

The following Software Terms and Conditions apply to any software furnished by Seller, whether separately packaged or embedded in the Products furnished by Seller hereunder:

(a) Seller hereby grants to Buyer: a non-exclusive, non-transferable license to use any computer software delivered to Buyer under this Agreement in machine-readable, object code form and any modifications made by Seller thereto ("Software"), but only in connection with the configuration of the Products and operating system for which the Software is ordered and for the end-use purpose stated in the related Seller operating documentation. Buyer agrees that neither it nor any third party shall modify, reverse engineer, decompile or reproduce the Software, without Seller's prior written consent, except for making a single copy for backup or archival purposes in accordance with the related Seller operating documentation, and provided that Seller's confidential and proprietary legend is included. Except to the extent that the parties otherwise agree in writing, Buyer's license to use the copy of such Software shall terminate upon breach of this license or Agreement by Buyer, including, without limitation, breach of payment or confidentiality obligations. All copies of the Software are the property of Seller, and all copies for which the license is terminated shall be returned to Seller promptly after termination.

(b) Buyer may not transfer this software license and warranty to a third party without Seller's previous written consent, signed by a Seller authorized representative.

(c) Seller warrants that on the date of shipment of the Software only to Buyer or Buyer's Seller-authorized transferee hereunder that: (1) the Software media contain a true and correct copy of the Software and are free from material defects; (2) Seller has the right to grant the license hereunder; and (3) the Software will function substantially in accordance with the related Seller operating documentation. Seller disclaims any warranty that the operation of the Software will be uninterrupted or error free. This warranty does not apply to software delivered by Seller but produced by others. The warranty for software produced by others shall be the warranty as stated by the software producer.

(d) If within six months (6) months from date of initial installation (but not more than one year from date of shipment by Seller to Buyer) of Software, Buyer discovers that the Software is not as warranted above and promptly notifies Seller in writing, within this period of time, of the nonconformity, and if Seller cannot correct the nonconformity or deems correction to be commercially impracticable or prohibitively expensive, Buyer's and Buyer's Seller-authorized transferee's exclusive remedies, at Seller's option and expense, are: (1) replacement of the nonconforming Software; or (2) termination of this license and a refund of an equitable, pro rata share of the contract price or license fee paid.

(e) If any infringement and trade secret claims are made against Buyer based on the Buyer's use of the Software in a manner specified or approved by Seller, Seller shall: (i) defend against any suit or proceeding brought by an unaffiliated third party against Buyer to the extent the suit or proceeding is based on a claim that the Software or that the specified or approved use of the Software infringes a United States patent, a copyright or violates a trade secret agreement in which Seller was a party and provided that Seller is notified promptly in writing and given the necessary authority, information and assistance for the defense and settlement of such suit or proceeding (including the sole authority to select counsel and remove the Software or stop accused infringing usage); (ii) Seller shall satisfy any settlement or final judgment (after any appeals) for damages entered against Buyer in such suit; and (iii) if such settlement prohibits or judgment enjoins Buyer from using the Software, Seller shall at its option: (a) obtain for Buyer the right to continue using such Software; (b) eliminate the infringement by replacing or modifying the Software, or (c) take back such Software and refund to Buyer all payments on the purchase price which Seller has received, in which case neither Buyer nor Seller will have any claim against the other under this Agreement or arising out of the subject matter of this Agreement. However, Seller's obligations with respect to infringement and trade secret claims will not apply to the extent that the claim or adverse final judgment is based on: (1) Buyer's running of the Software after being notified to discontinue running due to such a claim; (2) the combination of the Software with a non-Seller software, product, data or process; (3) damages attributable to the value of the use of a non-Seller software, product, data, or process; (4) Buyer's alteration of the Software; (5) Buyer's distributed the Software to, or its use for the benefit of, any third party; or (6) Buyer's acquiring a trade secret (a) through improper means; (b) under circumstances giving rise to a duty to maintain its secrecy or limit its use; or (c) from a person (other than Seller) who owed to the party asserting the claim a duty to maintain the secrecy or limit the use of the trade secret. Buyer will reimburse Seller for any costs or damages that result from these actions 1 to 6. If Seller receives information about an infringement claim related to the Software, Seller may do any of the following, at its expense and without obligation to do so: (i) procure the right to continue use of the Software, (ii) replace the Software with a functional equivalent and (iii) modify the Software to make it non-infringing (including disabling the challenged functionality and under circumstances (ii) and (iii) Buyer will stop running the allegedly infringing software immediately).

(f) This warranty will apply for the period specified in (d) above, provided that: (1) the Software is not modified, changed, or altered by anyone other than Seller or its suppliers, unless authorized by Seller in writing; (2) there is no change by anyone other than Seller to the goods for which the Software is ordered; (3) the goods are in good operating order and are installed in a suitable operating environment; (4) the nonconformity is not caused by Buyer or any of their agents, servants, employees, or contractors, or any third party; (5) Buyer promptly notifies Seller in writing, within the period of time set forth in (d) above, of the nonconformity after it is discovered; and (6) all fees for the Software due to Seller have been paid. SELLER HEREBY DISCLAIMS ALL OTHER WARRANTIES, EXPRESS OR IMPLIED, WITH REGARD TO THE SOFTWARE, INCLUDING BUT NOT LIMITED TO IMPLIED WARRANTIES OF MERCHANTABILITY, FITNESS FOR A PARTICULAR PURPOSE, COURSE OF DEALING AND USAGE OF TRADE.

(g) Buyer and successors of Buyer are limited to the remedies specified in this paragraph 10 and shall have no others for a nonconformity in the Software. Buyer agrees that these remedies provide Buyer and its successors with a minimum adequate remedy and are their exclusive remedies, whether Buyer's or successors' remedies are based on contract, warranty, tort (including negligence), strict liability, indemnity, or any other legal theory, and whether arising out of warranties, representations, instructions, operating documentation, installations, or non-conformities from any cause.

(h) Unless otherwise provided in this Agreement, the fees for this Software license are included in the purchase price of the Products. Any subsequent modifications or enhancements to the Software made by Seller are, at Seller's option, subject to a fee.

11. TERMINATION

Buyer may only terminate its order upon written notice to Seller and upon payment to Seller of Seller's termination charges, which shall be specified to Buyer and shall take into account among other things expenses (direct and indirect) incurred and commitments already made by Seller and an appropriate profit; provided, that in no event shall Seller's termination charges be less than 25% of the contract price. Seller shall have the right to suspend and/or terminate its obligations under this Agreement if payment is not received within 30 days of due date. In the event of the bankruptcy or insolvency of Buyer or in the event of any bankruptcy or insolvency proceeding brought by or against Buyer, Seller shall be entitled to terminate any order outstanding at any time during the period allowed for filing claims against the estate and shall receive reimbursement for its cancellation charges.

12. CONFIDENTIALITY

Buyer acknowledges that the information which Seller submits to Buyer in connection with this quotation, acknowledgment or performance of this Agreement includes Seller's confidential and proprietary information, both of a technical and commercial nature. Buyer agrees not to disclose such information to third parties without Seller's prior written consent. Seller grants to Buyer a non-exclusive, royalty-free, perpetual license to use Seller's confidential and proprietary information for purposes of this Agreement and the Products that are the subject hereof only. Buyer further agrees not to permit any third party to fabricate the Products or any parts thereof from Seller's drawings or to use the drawings other than in connection with this Agreement. Buyer will defend and indemnify Seller from any claim, suit or liability based on personal injury (including death) or property damage related to any Product or part thereof which is fabricated by a third party without Seller's prior written consent and from and against related costs, charges and expenses (including attorneys fees). All copies of Seller's drawings shall remain Seller's property and may be reclaimed by Seller at any time.

13. END USER

If Buyer is not the end user of the Products sold hereunder (the "End User"), then Buyer will use its best efforts to obtain the End User's written consent to be bound to Seller by the provisions hereof. If Buyer does not obtain such End User's consent, Buyer shall defend and indemnify Seller and Seller's agents, employees, subcontractors and suppliers from any action, liability, cost, loss, or expense for which Seller would not have been liable or from which Seller would have been indemnified if Buyer had obtained such End User's consent.

14. FORCE MAJEURE

(a) Force Majeure Defined. For the purpose of this Agreement "Force Majeure" will mean all unforeseeable events, beyond the reasonable control of either party which affect the performance of this Agreement, including, without limitation, acts of God, acts or advisories of governmental or quasi-governmental authorities, laws or regulations, strikes, lockouts or other industrial disturbances, acts of public enemy, wars, insurrections, riots, epidemics, pandemics, outbreaks of infectious disease or other threats to public health, lightning, earthquakes, fires, storms, severe weather, floods, sabotage, delays in transportation, rejection of main forgings and castings, lack of available shipping by land, sea or air, lack of dock lighterage or loading or unloading facilities, inability to obtain labor or materials from usual sources, serious accidents involving the work of suppliers or sub-suppliers, thefts and explosions.

(b) Suspension of Obligations. If either Buyer or Seller is unable to carry out its obligations under this Agreement due to Force Majeure, other than the obligation to make payments due hereunder, and the party affected promptly notifies the other of such delay, then all obligations that are affected by Force Majeure will be suspended or reduced for the period of Force Majeure and for such additional time as is required to resume the performance of its obligations, and the delivery schedule will be adjusted to account for the delay.

(c) Option to Terminate. If the period of suspension or reduction of operations will extend for more than four (4) consecutive months or periods of suspension or reduction total more than six (6) months in any twelve (12) month period, then either Buyer or Seller may terminate this Agreement.

15. INDEMNIFICATION AND INSURANCE

(a) Indemnification. Seller agrees to defend and indemnify Buyer from and against any third-party claim for bodily injury or physical property damage ("Loss") arising in connection with the Products provided by Seller hereunder or the work performed by Seller hereunder, but only to the extent such Loss has been caused by the negligence, willful misconduct or other legal fault ("Fault") of Seller. Buyer shall promptly tender the defense of any such third-party claim to Seller. Seller shall be entitled to control the defense and resolution of such claim, provided that Buyer shall be entitled to be represented in the matter by counsel of its choosing at Buyer's sole expense. Where such Loss results from the Fault of both Seller and Buyer or a third party, then Seller's defense and indemnity obligation shall be limited to the proportion of the Loss that Seller's Fault bears to the total Fault.

(b) Insurance. Seller shall maintain commercial general liability insurance with limits of not less than $2,000,000 per occurrence and in the aggregate covering claims for bodily injury (including death) and physical property damage arising out of the Products. Seller will provide a Certificate of Insurance certifying the existence of such coverages upon request.

16. GENERAL

(a) Seller represents that any Products or parts thereof manufactured by Seller will be produced in compliance with all applicable federal, state and local laws applicable to their manufacture and in accordance with Seller's engineering standards. Seller shall not be liable for failure of the Products to comply with any other specifications, standards, laws or regulations.

(b) This Agreement shall inure only to the benefit of Buyer and Seller and their respective successors and assigns. Any assignment of this Agreement or any of the rights or obligations hereunder, by either party without the written consent of the other party shall be void.

(c) This Agreement contains the entire and only agreement between the parties with respect to the subject matter hereof and supersedes all prior oral and written
understandings between Buyer and Seller concerning the Products and any prior course of dealings or usage of the trade not expressly incorporated herein.

(d) This Agreement may be modified, supplemented or amended only by a writing signed by an authorized representative of Seller. Seller's waiver of any breach by Buyer of any terms of this Agreement must also be in writing and any waiver by Seller or failure by Seller to enforce any of the terms and conditions of this Agreement at any time, shall not affect, limit or waive Seller's right thereafter to enforce and compel strict compliance with every term and condition thereof.

(e) (i) If the Products are delivered or performed in the United States, this Agreement and the performance thereof will be governed by and construed according to the laws of the State of Georgia.

(ii) In the circumstances of (i) above, any controversy or claim arising out of or relating to this Agreement, or the breach thereof, or to the Products provided pursuant hereto, shall be definitively settled by arbitration, to the exclusion of courts of law, administered by the American Arbitration Association ("AAA") in accordance with its Construction Industry Arbitration Rules in force at the time this Agreement is signed and to which the parties declare they will adhere (the "AAA Rules"), and judgment on the award rendered by the arbitrator(s) may be entered in any court having jurisdiction over the party against whom enforcement is sought or having jurisdiction over any of such party's assets. The arbitration shall be conducted in Atlanta, Georgia by a panel of three members, one of whom will be appointed by each of Buyer and Seller and the third of whom will be the chairman of the panel and will be appointed by mutual agreement of the two party-appointed arbitrators. All arbitrators must be persons who are not employees, agents, or former employees or agents of either party. In the event of failure of the two party-appointed arbitrators to agree within forty-five (45) days after submission of the dispute to arbitration upon the appointment of the third arbitrator, the third arbitrator will be appointed by the AAA in accordance with the AAA Rules. In the event that either of Buyer or Seller fails to appoint an arbitrator within thirty (30) days after submission of the dispute to arbitration, such arbitrator, as well as the third arbitrator, will be appointed by the AAA in accordance with the AAA Rules.

(f) (i) If the Products are delivered or performed in Canada, this Agreement and the performance thereof will be governed by and construed according to the laws of the Province of New Brunswick.

(ii) In the circumstances of (i) above, any controversy or claim arising out of or relating to this Agreement, or the breach thereof, or to the Products provided pursuant hereto, shall be definitively settled under the auspices of the Canadian Commercial Arbitration Centre ("CCAC"), by means of arbitration and to the exclusion of courts of law, in accordance with its General Commercial Arbitration Rules in force at the time the Agreement is signed and to which the parties declare they will adhere (the "CCAC Rules"), and judgment on the award rendered by the arbitrator(s) may be entered in any court having jurisdiction over the party against whom enforcement is sought or having jurisdiction over any of such party's assets. The arbitration shall be conducted in Saint John, New Brunswick by a panel of three arbitrators, one of whom will be appointed by each of Buyer and Seller and the third of whom will be the chairman of the arbitral tribunal and will be appointed by mutual agreement of the two party-appointed arbitrators. All arbitrators must be persons who are not employees, agents, or former employees or agents of either party. In the event of failure of the two party-appointed arbitrators to agree within forty-five (45) days after submission of the dispute to arbitration upon the appointment of the third arbitrator, the third arbitrator will be appointed by the CCAC in accordance with the CCAC Rules. In the event that either of Buyer or Seller fails to appoint an arbitrator within thirty (30) days after submission of the dispute to arbitration, such arbitrator, as well as the third arbitrator, will be appointed by the CCAC in accordance with the CCAC Rules.

(g) The parties hereto have required that this Agreement be drawn up in English. Les parties aux présentes ont exigé que la présente convention soit rédigée en anglais.

Jan 2012 Rev.

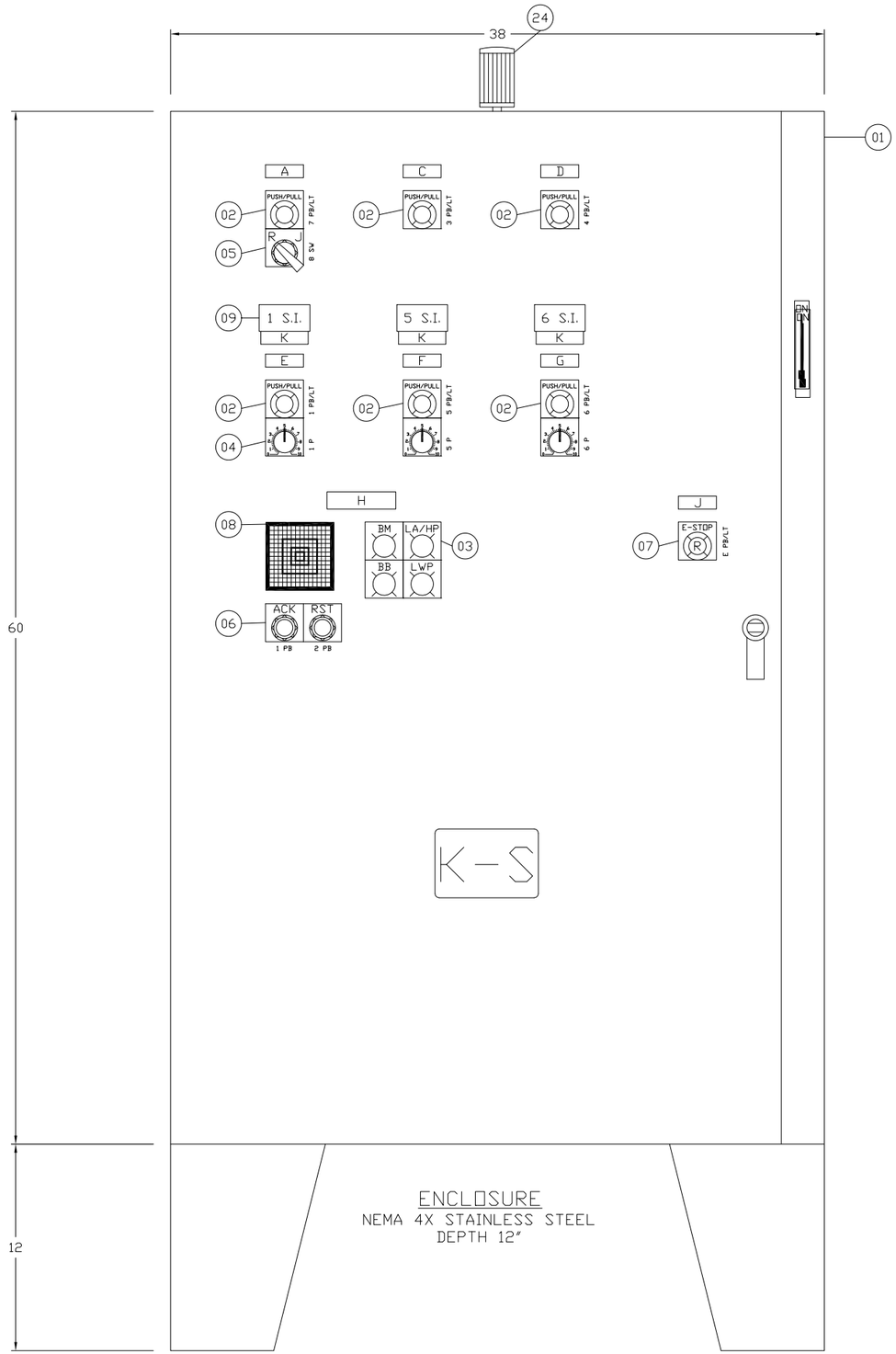

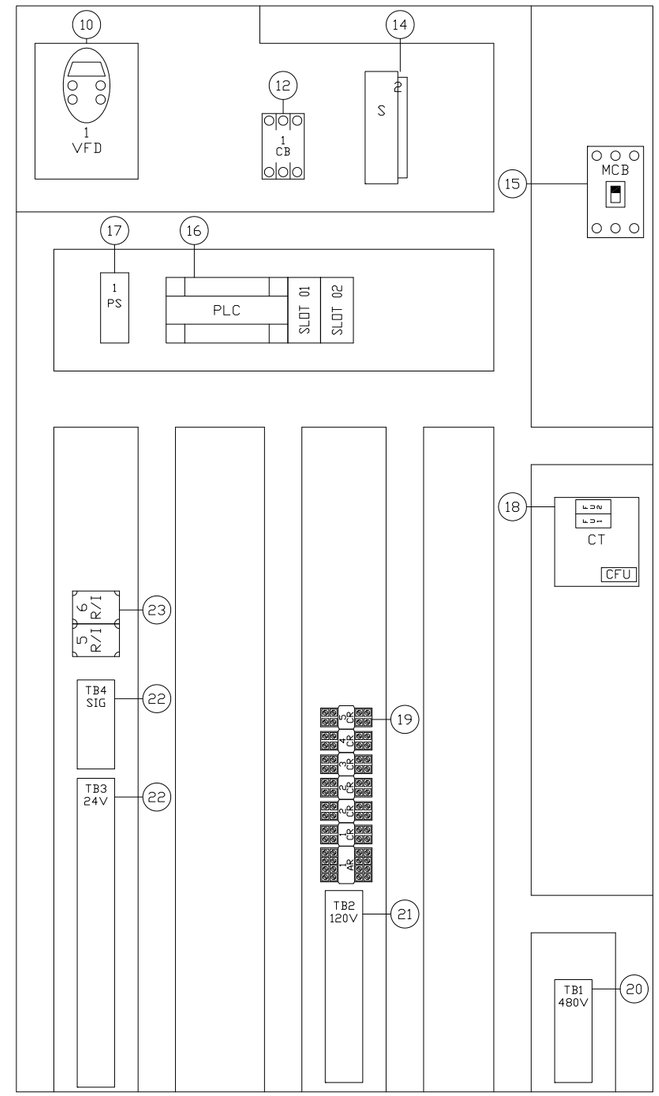

SUB-PANEL

ITEM	DESCRIPTION
01	ENCLOSURE, NEMA 4X STAINLESS STEEL
02	PUSHBUTTON/LIGHT, 24V DC
03	PILOT LIGHT, 24V DC
04	SPEED CONTROL POTENTIOMETER
05	SELECTOR SWITCH, 2 POSITION
06	PUSHBUTTON, MOMENTARY
07	EMERGENCY STOP
08	ALARM HORN
09	SPEED INDICATORS
10	GRAVITY DRIVE VFD CONTROLLER
11	GRAVITY DRIVE CONTROL RELAY
12	GRAVITY DRIVE CIRCUIT BREAKER
13	
14	WASHWATER PUMP MOTOR STARTER
15	MAIN CIRCUIT BREAKER
16	PROGRAMMABLE LOGIC CONTROLLER
17	POWER SUPPLY, 24V DC
18	CONTROL TRANSFORMER
19	CONTROL RELAY, 2PDT
20	TERMINAL BLOCK, 480V AC, TB1
21	TERMINAL BLOCK, 120V AC, TB2
22	TERMINAL BLOCK, 24V DC, TB3
23	POTENTIOMETER TO CURRENT CONVERTOR
24	BEACON LIGHT 24VDC
25	
26	
27	
28	
29	
30	

NAMEPLATE LEGEND

A CYCLE

C WASHWATER PUMP
D THICKENED SLUDGE PUMP
E GRAVITY DRIVE
F POLYMER PUMP
G SLUDGE PUMP
H EMERGENCY STOP
J ALARM
K SPEED INDICATOR

REV | DRWN | CHKD | DATE | APPR
THIS DRAWING IS THE PROPRIETARY PROPERTY OF KOMLINE-SANDERSON ENGINEERING CORPORATION. IT IS LOANED IN CONFIDENCE AND MUST BE RETURNED ON DEMAND. ANY USE DETRIMENTAL TO THE INTERESTS OF KOMLINE-SANDERSON ENGINEERING CORPORATION IS PROHIBITED. IT MUST NOT BE LOANED, COPIED OR REPRODUCED WITHOUT PERMISSION.

TITLE
K-S GRAVABELT
CONTROL PANEL LAYOUT
–

CEL16
–
–
–

DESIGNED BY	DRAWN BY	CHECKED BY	APPROVED BY
–	GRK	–	–

DATE 04-Feb-09
SCALE 1=4

KOMLINE-SANDERSON
ENGINEERING CORPORATION
PEAPACK, NJ 07977 USA

REFERENCE:
DRAWING NO. CEL16-00152D
REV A
SHT 1 OF 1

PRINT MAY BE REDUCED SIZE, DO NOT SCALE. ☐☐☐☐☐☐☐☐=ONE INCH(1")

01-JUL-02

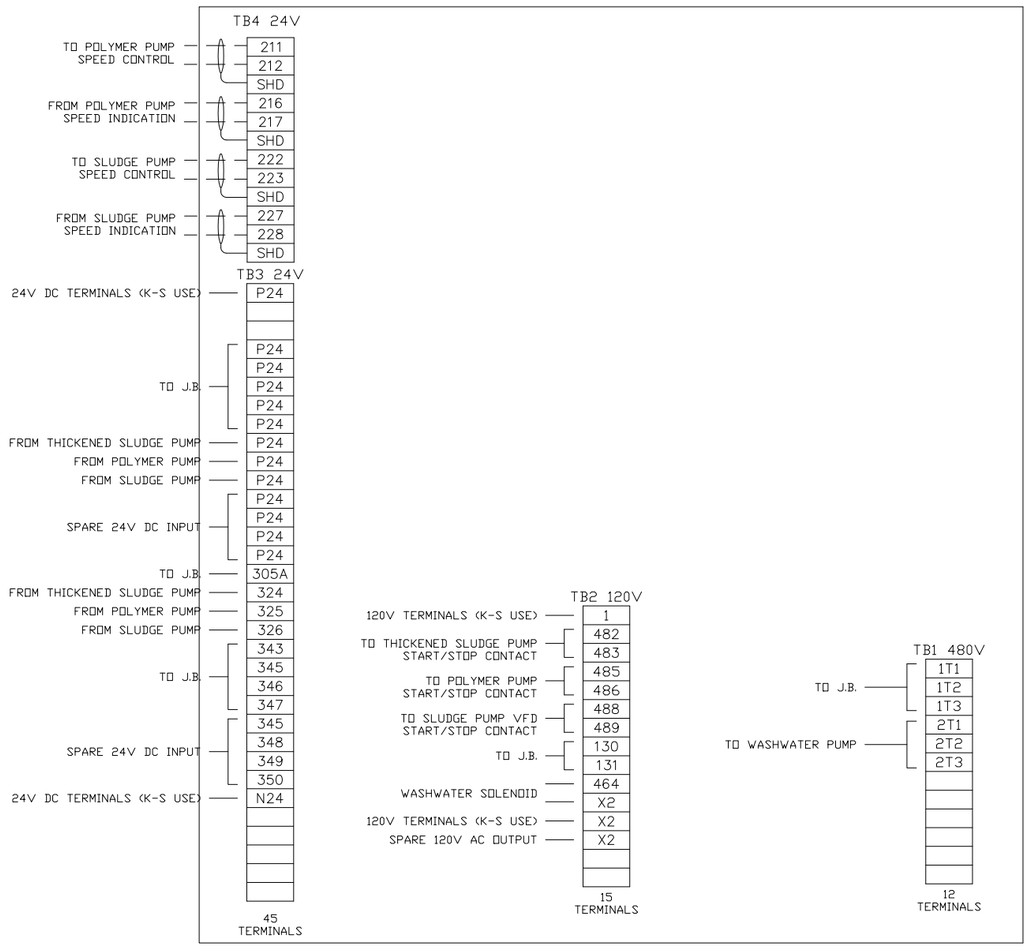

CONTROL PANEL TERMINALS

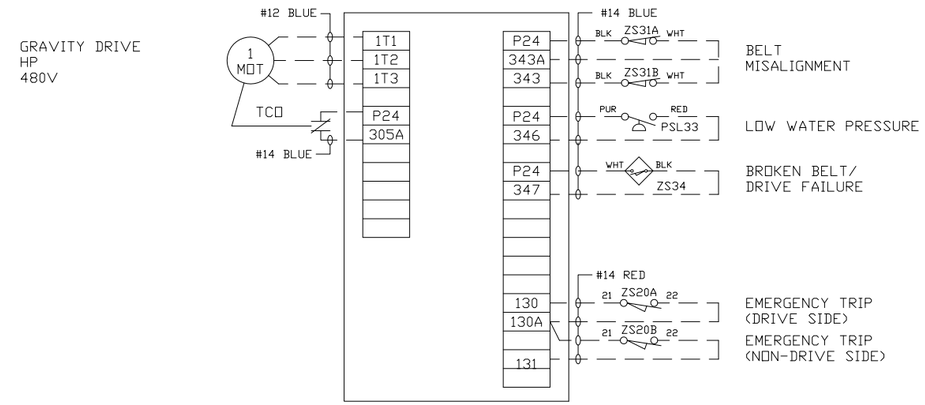

NEMA 4X STAINLESS STEEL
JUNCTION BOX MOUNTED ON GRAVABELT
(JUNCTION BOX PRE-WIRED BY K-S)

NOTES

1. INTERCONNECTING WIRING AND CONDUIT BETWEEN THE CONTROL PANEL AND THE JUNCTION BOX ARE NOT FURNISHED BY K-S. ALL CONDUIT SHOULD BE WATERTIGHT AND CORRISION RESISTANT (ROBROY PLASTI-BOND RED OR EQUAL).

2. ALL CONDUIT ENTRIES INTO JUNCTION BOX SHOULD BE MADE THROUGH THE BOTTOM OF JUNCTION BOX.

REV	DRWN	CHKD	DATE	APPR

THIS DRAWING IS THE PROPRIETARY PROPERTY OF KOMLINE-SANDERSON ENGINEERING CORPORATION. IT IS LOANED IN CONFIDENCE AND MUST BE RETURNED ON DEMAND. ANY USE DETRIMENTAL TO THE INTERESTS OF KOMLINE-SANDERSON ENGINEERING CORPORATION IS PROHIBITED. IT MUST NOT BE LOANED, COPIED OR REPRODUCED WITHOUT PERMISSION.

TITLE
K-S GRAVABELT
INTERCONNECTION DIAGRAM
–

CEL16
–
–
–

DESIGNED BY	DRAWN BY	CHECKED BY	APPROVED BY
–	GRK	–	–

DATE 05-Feb-09
SCALE NONE

KOMLINE-SANDERSON
ENGINEERING CORPORATION
PEAPACK, NJ 07977 USA

REFERENCE:
DRAWING NO. CEL16-00153D
REV B
SHT 1 OF 1

PRINT MAY BE REDUCED SIZE, DO NOT SCALE. ☐☐☐☐☐☐☐☐=ONE INCH(1")

01-JUL-02

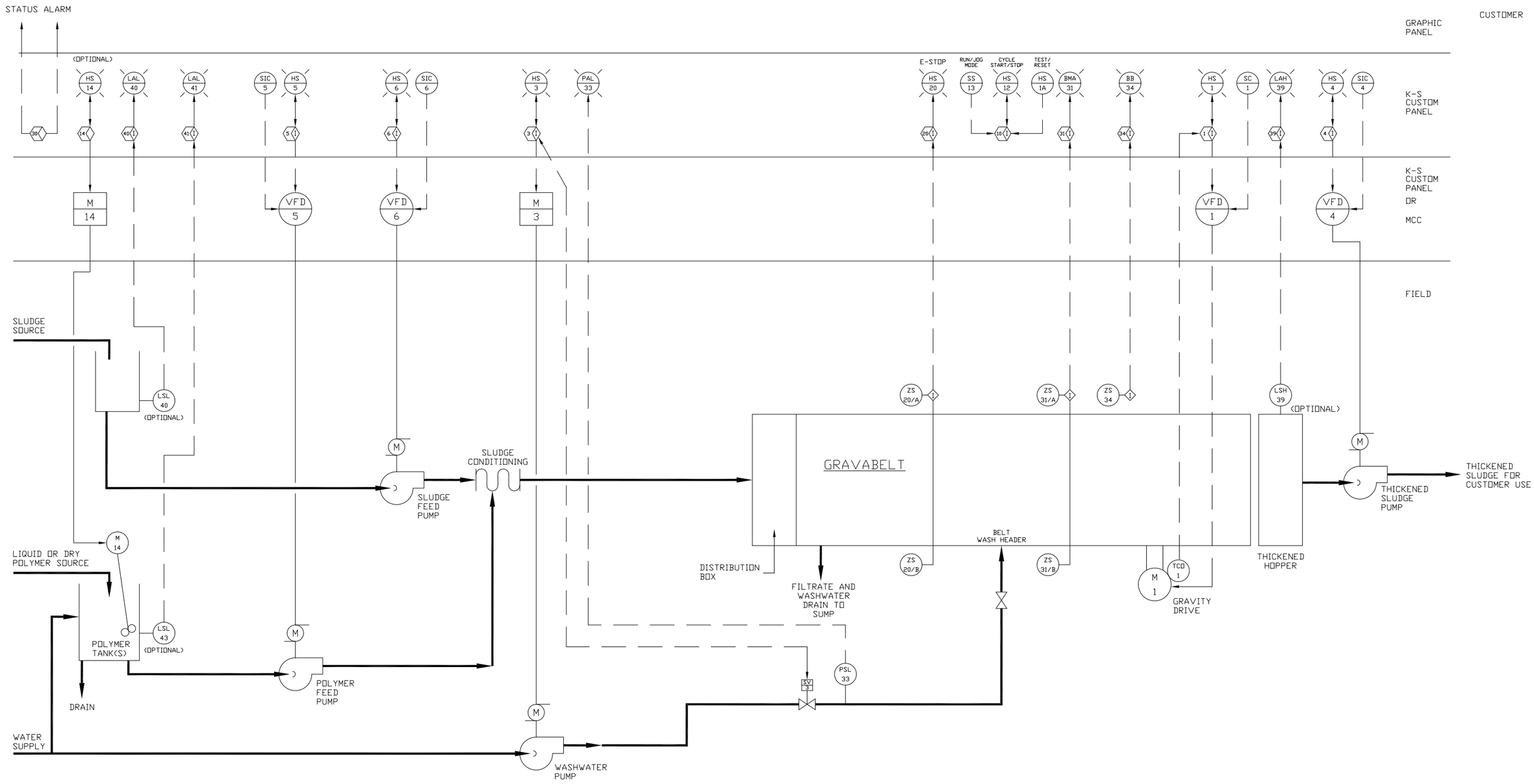

LEGEND

- PROCESS FLOW
- ELECTRICAL
- ELECTRICAL SIGNAL
- ES — EMERGENCY STOP
- HS — OPERATOR - PULL TO START PUSH TO STOP W/INDICATOR
- LSL — LEVEL SENSOR - LOW
- LSH — LEVEL SENSOR - HIGH
- PSL — PRESSURE SENSOR - LOW
- SIC — SPEED INDICATING CONTROL
- TCO — THERMAL CUT-OUT
- ZS — POSITION SWITCH

SYMBOLS

- M / X — MOTOR STARTER
- VFD / XXX — VFD DRIVE
- M / XXX — MOTOR
- SV / X — SOLENOID VALVE
- HAND VALVE
- XXX — MOUNTED ON PANEL BOARD
- XXX — MOUNTED LOCALLY
- X — PROGRAMMABLE CONTROLLER I/O NUMBER &/OR INTERLOCK

ALARMS / SHUTDOWN

BMA/31	BELT MISALIGNMENT	INSTANT
PAL/33	LOW WATER PRESSURE	PROGRAMMED
BB/34	BELT BROKEN	INSTANT
CDA/39	HIGH THICKENED SLUDGE LEVEL	INSTANT
LAL/40	LOW LEVEL SLUDGE TANK	PROGRAMMED
LAL/41	LOW LEVEL POLYMER TANK	PROGRAMMED
HS/20	EMERGENCY STOP/ EMERGENCY TRIP	INSTANT

THIS DRAWING IS THE PROPRIETARY PROPERTY OF KOMLINE-SANDERSON ENGINEERING CORPORATION. IT IS LOANED IN CONFIDENCE AND MUST BE RETURNED ON DEMAND. ANY USE DETRIMENTAL TO THE INTERESTS OF KOMLINE-SANDERSON ENGINEERING CORPORATION IS PROHIBITED. IT MUST NOT BE LOANED, COPIED OR REPRODUCED WITHOUT PERMISSION.

REV | DRWN | CHKD | DATE | APPR

TITLE: K-S GRAVABELT P & I DIAGRAM – CEL16 – – –

DESIGNED BY	DRAWN BY	CHECKED BY	APPROVED BY
–	GRK	–	–

DATE: 05-Feb-09
SCALE: NONE

KOMLINE-SANDERSON ENGINEERING CORPORATION
PEAPACK, NJ 07977 USA

REFERENCE:
DRAWING NO.: CEL16-00154D
REV: –
SHT 1 OF 1

PRINT MAY BE REDUCED SIZE, DO NOT SCALE. ☐☐☐☐☐☐☐☐=ONE INCH(1")

01-JUL-02

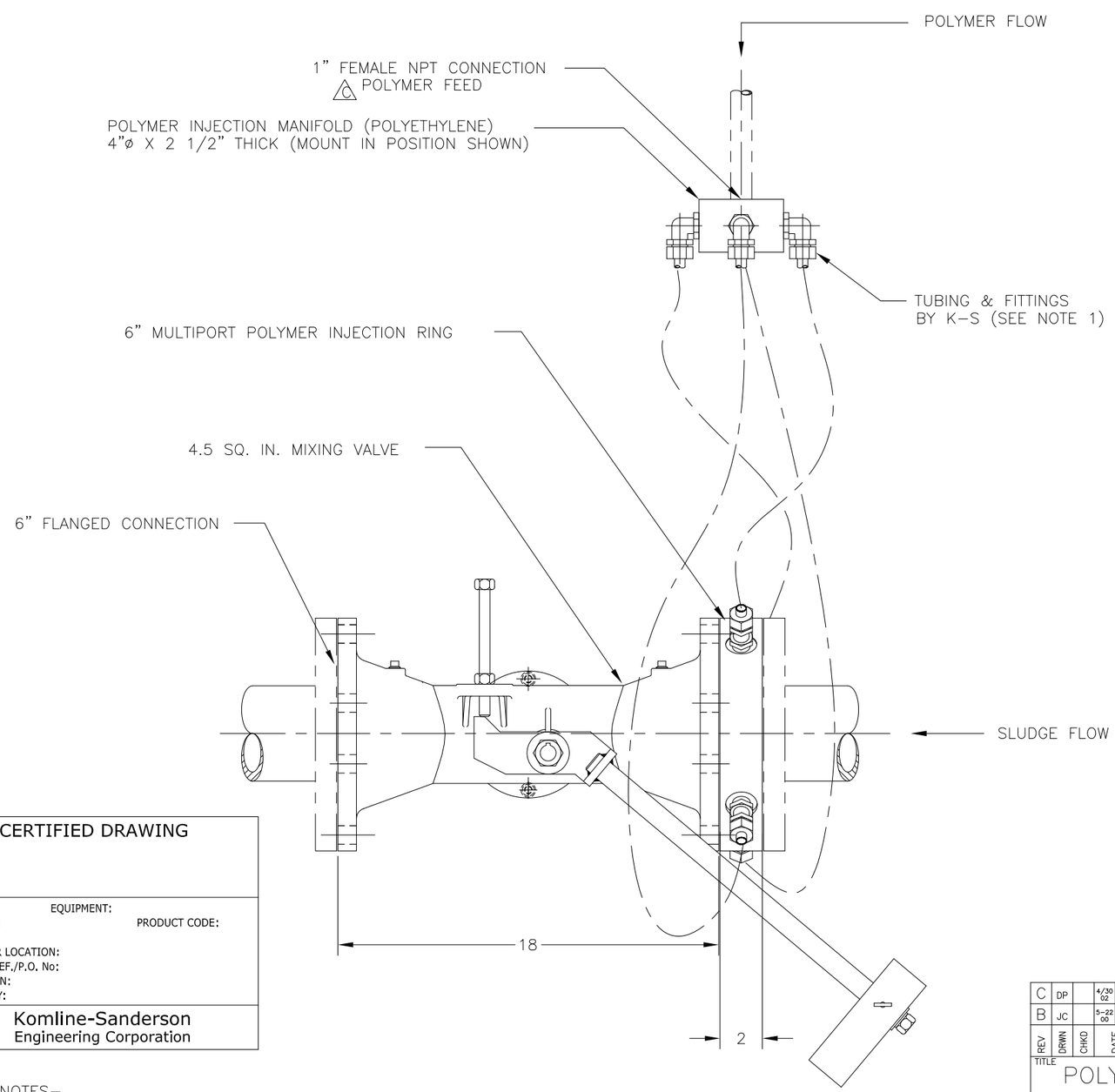

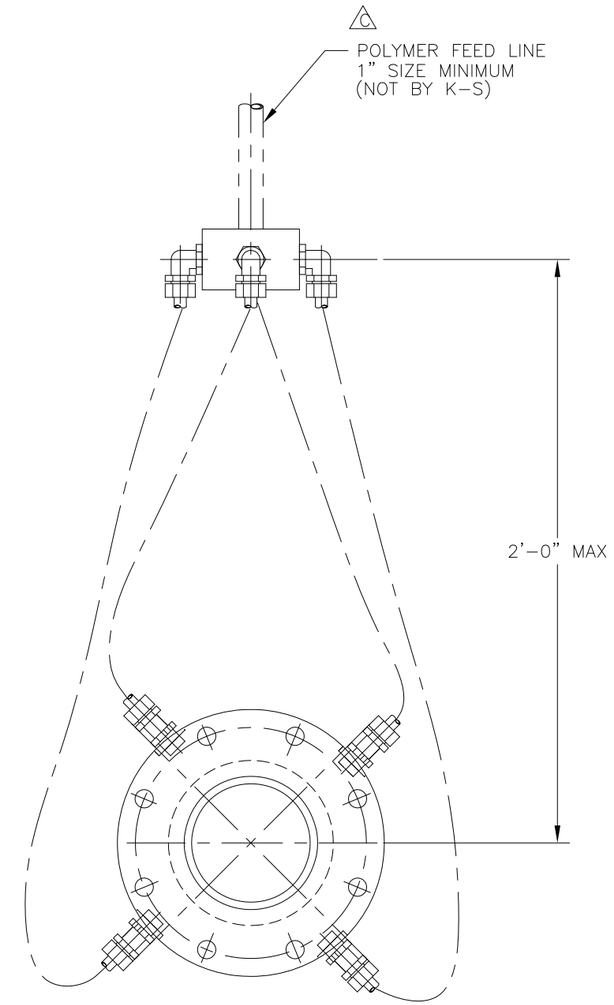

CERTIFIED DRAWING

K-S JOB No.: EQUIPMENT:
MODEL/SIZE: PRODUCT CODE:
CUSTOMER:
JOB NAME OR LOCATION:
CUSTOMER REF./P.O. No:
SPEC SECTION:
CERTIFIED BY:

Komline-Sanderson
Engineering Corporation

NOTES–

1. 10'–0" OF 1/2" 90 PSI POLYETHYLENE TUBING SUPPLIED.
2. FLANGED CONNECTIONS ARE 150# F.F. WITH BOLT HOLES STRADDLING CENTERLINES.

REV	DRWN	CHKD	DATE	APPR	
C	DP		4/30 02		ADDED MIN. TO FEED LINE SIZE; ADDED NOTE TO CONN.
B	JC		5-22 00		4.5 SQ. IN. WAS 4"

THIS DRAWING IS PROPRIETARY PROPERTY OF THE KOMLINE-SANDERSON ENGINEERING CORPORATION. IT IS LOANED IN CONFIDENCE AND MUST BE RETURNED ON DEMAND. ANY USE DETRIMENTAL TO THE INTERESTS OF KOMLINE-SANDERSON ENGINEERING CORPORATION IS PROHIBITED. IT MUST NOT BE LOANED, COPIED OR REPRODUCED WITHOUT PERMISSION.

TITLE
POLYMER MIXING ASSEMBLY
4.5 SQ. IN. VALVE
6" END CONN., 316 SS

CK050
–
–
–

DESIGNED BY	DRAWN BY	CHECKED BY	APPROVED BY
–	PAC	–	–

DATE 9/19/1995
SCALE 1=4

KOMLINE-SANDERSON
ENGINEERING CORPORATION
PEAPACK, NJ 07977 USA

REFERENCE:
DRAWING NO. CK050-16134C
REV C
SHT 1 OF 1

PRINT MAY BE REDUCED SIZE, DO NOT SCALE. ☐☐☐☐☐☐☐☐ =ONE INCH(1")

01-JUL-02

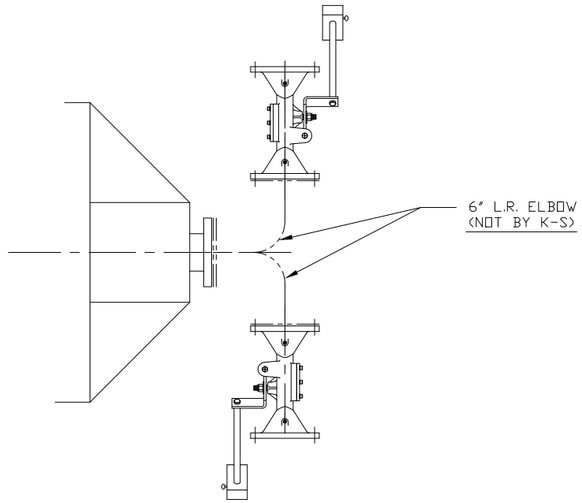

PLAN VIEW

OPTIONAL FEED ARRANGEMENTS

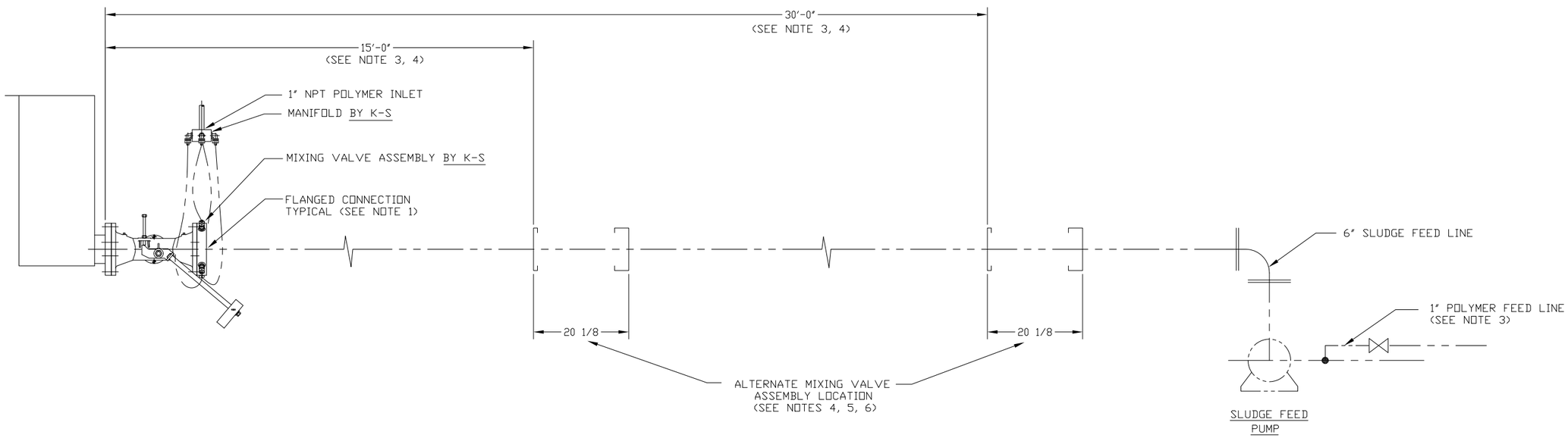

NOTES:

1. ALL PIPING AND VALVES HAVE 150# F.F. FLANGES (EXCEPT SLUDGE TANK HAS R.F. FLANGE) WITH BOLT HOLES STRADDLING CENTERLINES.
2. ALL PIPING SHOWN IN SCHEMATIC NOT BY K-S.
3. POLYMER FEED LINES MUST BE LOCATED AT POSITIONS SHOWN.
4. REMOVABLE SPOOL PIECES MUST BE FURNISHED AS CLOSE AS POSSIBLE TO ALTERNATE LOCATIONS SHOWN.
5. FOR POLYMER MIXING ASSEMBLY AND SLUDGE FEED LINE SIZE, SEE DWG. CK050-16134C.
6. DRAWING IS SCHEMATIC ONLY. MIXING VALVE AND INJECTION RING MUST BE INSTALLED HORIZONTALLY.
7. ANY EXCEPTIONS MUST BE APPROVED BY KOMLINE-SANDERSON KOMPRESS PRODUCT MANAGER.
8. DRAINS WITH VALVES SHOULD BE INSTALLED IN LOW POINTS OF FEED LINE FOR FULL DRAINAGE.
9. CUSTOMER TO FIELD SUPPORT VALVES & PIPING. DO NOT HANG VALVES & PIPING FROM PRESS.

CERTIFIED DRAWING

K-S JOB No.: EQUIPMENT:
MODEL/SIZE: PRODUCT CODE:
CUSTOMER:
JOB NAME OR LOCATION:
CUSTOMER REF./P.O. No:
SPEC SECTION:
CERTIFIED BY:

Komline-Sanderson
Engineering Corporation

FOR USE WITH
1.5M & 2.0M PRESSES
(6" INLET)

REV	DRWN	CHKD	DATE	APPR	
A	JC		5-22-00		REVISED DWG TITLE

THIS DRAWING IS THE PROPRIETARY PROPERTY OF KOMLINE-SANDERSON ENGINEERING CORPORATION. IT IS LOANED IN CONFIDENCE AND MUST BE RETURNED ON DEMAND. ANY USE DETRIMENTAL TO THE INTERESTS OF KOMLINE-SANDERSON ENGINEERING CORPORATION IS PROHIBITED. IT MUST NOT BE LOANED, COPIED OR REPRODUCED WITHOUT PERMISSION.

TITLE
SLUDGE & POLYMER
FEED ARRANGEMENT
4.5 SQ. IN. 316 SS VALVE

CK050
-
-
-

DESIGNED BY	DRAWN BY	CHECKED BY	APPROVED BY
	JC		

DATE 1/6/1997
SCALE 1=12

KOMLINE-SANDERSON
ENGINEERING CORPORATION
PEAPACK, NJ 07977 USA

REFERENCE:
DRAWING NO. CK050-16136D
REV A
SHT 1 OF 1

PRINT MAY BE REDUCED SIZE, DO NOT SCALE. □□□□□□□□=ONE INCH(1")

05/01/02

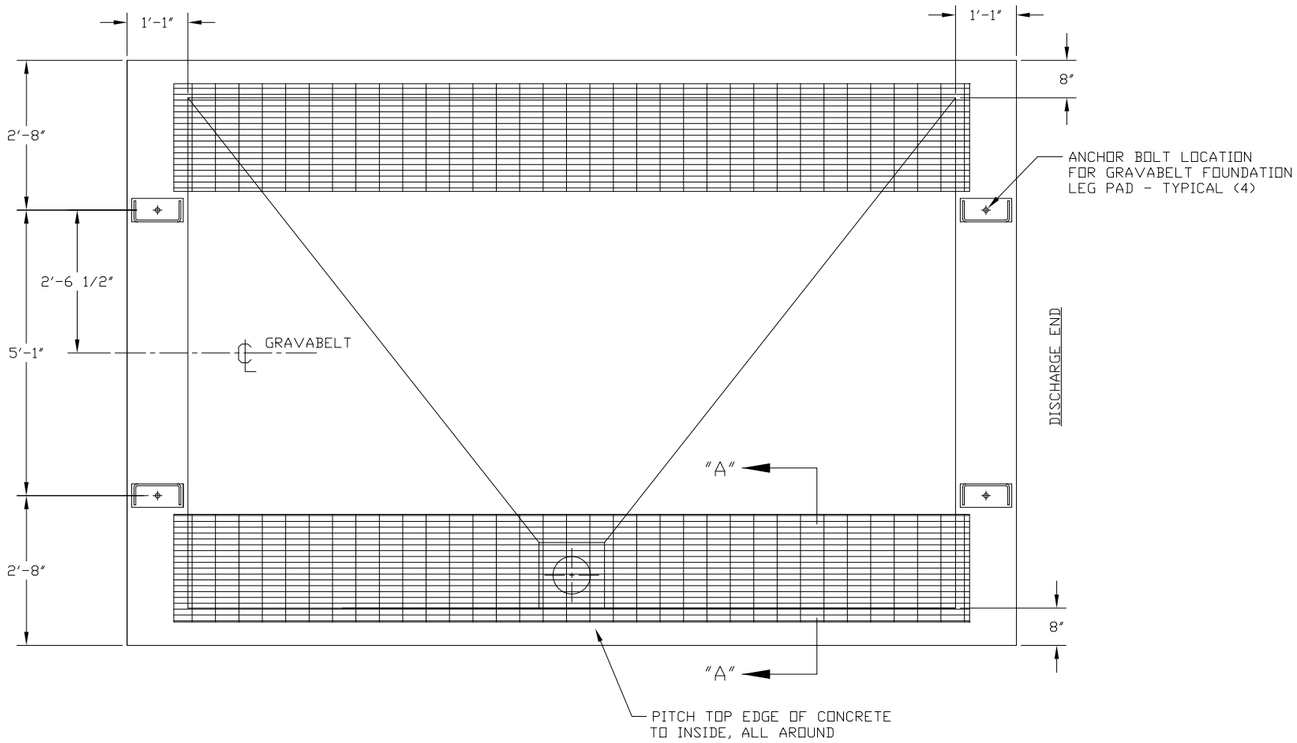

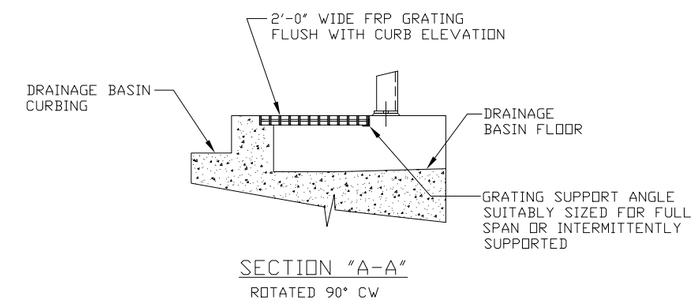

GRATING INSTALLATION DETAILS

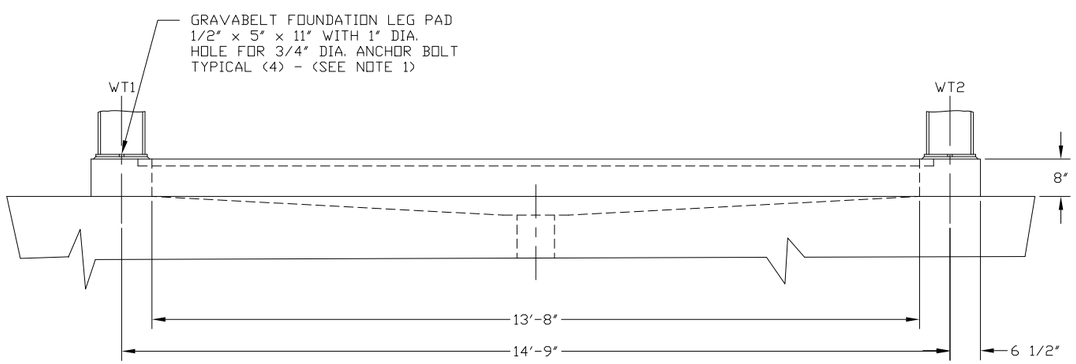

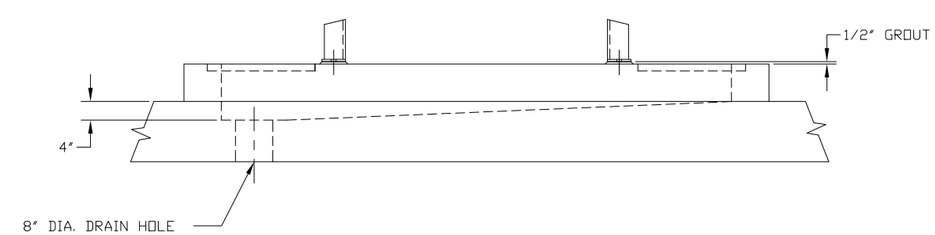

NOTES:

1 - 3/4" DIA. ANCHOR BOLTS TO PROJECT 2-1/4" ABOVE FOUNDATION PLATE. (NOT BY K-S UNLESS SPECIFIED).
2 - TOLERANCE ON ALL ANCHOR BOLT DIMENSIONS IS ± 1/8" MAX.; DIAGONAL MEASUREMENT DIFFERENTIAL IS 1/4".
3 - CONCRETE FOUNDATION SHOWN IS SUGGESTED ONLY AND NOT FURNISHED BY K-S NOR IS IT INTENDED TO CONFLICT WITH THE ENGINEER'S DRAWINGS.
4 - CUSTOMER INSTALLED GRATING IS RECOMMENDED BETWEEN SIDES OF GRAVABELT AND BASIN CURBING.

REV	DRWN	CHKD	DATE	APPR	
B	JC		15-5 '98		RESIZED & RELOCATED LEGS
A	JC		3-5 '98		RELOCATED WT1 LEG; RESHAPED FOUNDATION

THIS DRAWING IS THE PROPRIETARY PROPERTY OF KOMLINE-SANDERSON ENGINEERING CORPORATION. IT IS LOANED IN CONFIDENCE AND MUST BE RETURNED ON DEMAND. ANY USE DETRIMENTAL TO THE INTERESTS OF KOMLINE-SANDERSON ENGINEERING CORPORATION IS PROHIBITED. IT MUST NOT BE LOANED, COPIED OR REPRODUCED WITHOUT PERMISSION.

TITLE
GRAVABELT FOUNDATION PLAN
& ANCHOR BOLT LAYOUT
GSC-1 SERIES III

CK070
-
-
-

DESIGNED BY	DRAWN BY	CHECKED BY	APPROVED BY
-	JC	-	-

DATE 22-Sep-97
SCALE 1=16

KOMLINE-SANDERSON
ENGINEERING CORPORATION
PEAPACK, NJ 07977 USA

REFERENCE:
DRAWING NO. CK070-10004D
REV B
SHT 1 OF 1

PRINT MAY BE REDUCED SIZE, DO NOT SCALE. □□□□□□□□=ONE INCH(1")

01-JUL-02

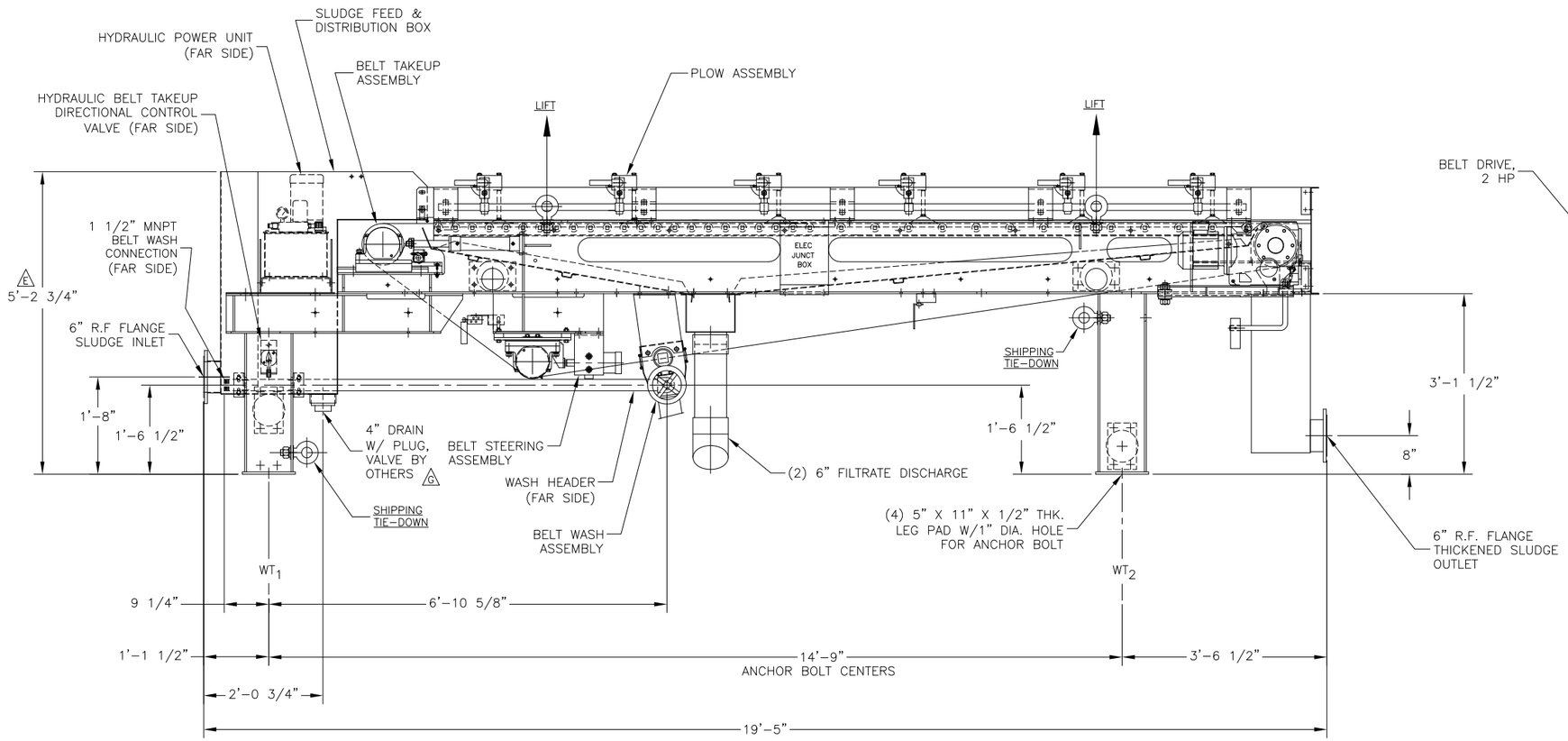

ELEVATION

R.H. SHOWN

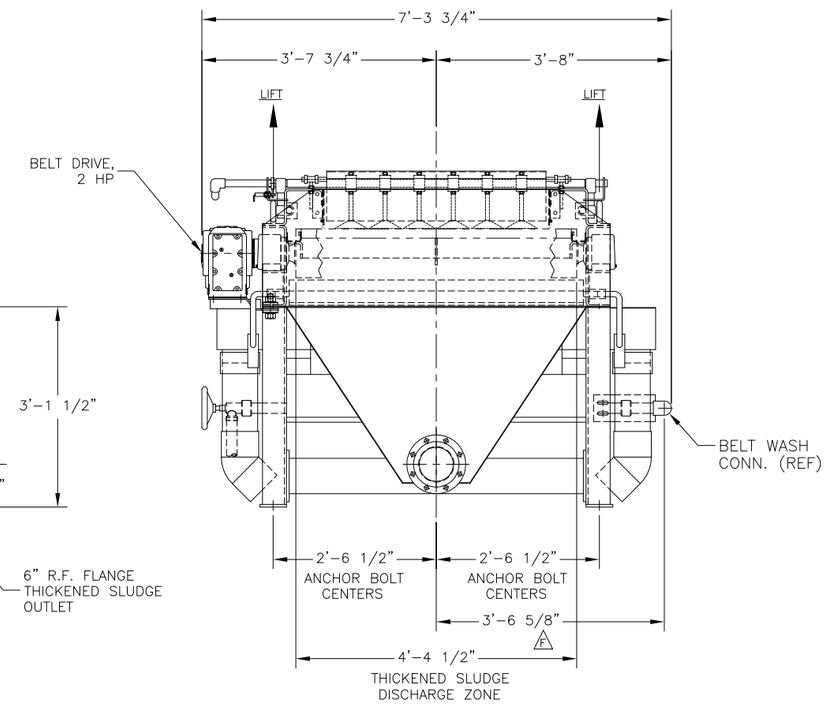

DISCHARGE END

R.H. SHOWN

NOTES:

1. CUSTOMER TO FIELD SUPPORT PIPING: DO NOT HANG PIPING FROM GRAVABELT.
2. SEE CERTIFIED SPECIFICATIONS FOR BELT WASH WATER REQUIREMENTS.
3. CUSTOMER TO SUPPLY SHUT-OFF VALVE FOR WASH WATER SYSTEM TO ISOLATE GRAVABELT.
4. ANCHOR BOLTS NOT SUPPLIED UNLESS LISTED IN CERTIFIED SPECIFICATIONS.
5. FLANGED CONNECTION: 150 LB. RAISED FACE, STD ASA DRILLING.
6. ALL WEIGHTS ARE APPROXIMATE, LOADED WEIGHT SHOWN (WT1 ETC.) IS TOTAL WEIGHT ON LEG AT POINT INDICATED.
7. FOR SUGGESTED FOUNDATION & ANCHOR BOLT PLAN REFER TO DWG. CK070-10004D.
8. SEE SHEET 2 FOR PLAN VIEW.

NET WT.	LOADED GROSS WT.	LOADED WT1 NEAR SIDE	LOADED WT1 FAR SIDE	LOADED WT2 NEAR SIDE	LOADED WT2 FAR SIDE	
5,300 LBS.	7,600 LBS	2,400 LBS	2,400 LBS	1,400 LBS	1,400 LBS	D

REV	DRWN	CHKD	DATE	APPR	
F	FRL		13-May-08		DIM WAS 3'-6"; ADDED 'VALVE BY...' NOTE
E	PAC		11/1 00	M	UPDATED PLOW ASSEMBLY; 5'-2 3/4" WAS 5'-8 1/2"
D	JC		3-10 99	M	REVISED LOADED WEIGHTS
C	JC		1-10 98	M	GENERAL REVISION
B	JC		3-9 98	M	REVISED FEED END; RELOCATED WT1 LEG
A	FL		2/6 98	M	ADDED THICKENED SLUDGE DISCHARGE HOPPER

THIS DRAWING IS THE PROPRIETARY PROPERTY OF KOMLINE-SANDERSON ENGINEERING CORPORATION. IT IS LOANED IN CONFIDENCE AND MUST BE RETURNED ON DEMAND. ANY USE DETRIMENTAL TO THE INTERESTS OF KOMLINE-SANDERSON ENGINEERING CORPORATION IS PROHIBITED. IT MUST NOT BE LOANED, COPIED OR REPRODUCED WITHOUT PERMISSION.

TITLE
GRAVABELT
GSC-1 SERIES III
(HYD. T/U, HYD. STEER.)

CK□70
–
–
–

DESIGNED BY	DRAWN BY	CHECKED BY	APPROVED BY
–	JC	–	–

DATE 22-Sep-02
SCALE 1=14

KOMLINE-SANDERSON
ENGINEERING CORPORATION
PEAPACK, NJ 07977 USA

REFERENCE:
DRAWING NO. CK□70-10020D
REV F
SHT 1 OF 2

PRINT MAY BE REDUCED SIZE, DO NOT SCALE. □□□□□□□□=ONE INCH(1")

01-JUL-02

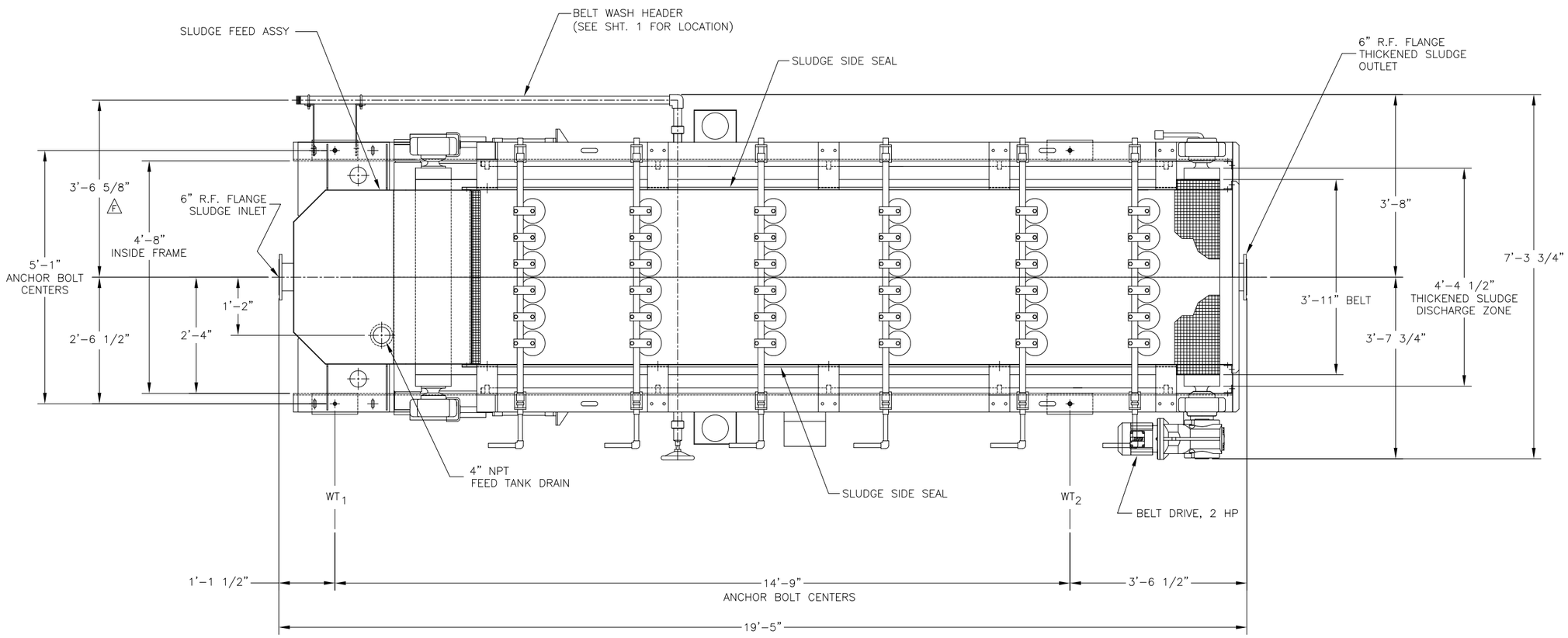

PLAN VIEW

(R.H. UNIT AS SHOWN)

SEE SHEET 1 FOR REVISIONS

REV	DRWN	CHKD	DATE	APPR	THIS DRAWING IS THE PROPRIETARY PROPERTY OF KOMLINE-SANDERSON ENGINEERING CORPORATION. IT IS LOANED IN CONFIDENCE AND MUST BE RETURNED ON DEMAND. ANY USE DETRIMENTAL TO THE INTERESTS OF KOMLINE-SANDERSON ENGINEERING CORPORATION IS PROHIBITED. IT MUST NOT BE LOANED, COPIED OR REPRODUCED WITHOUT PERMISSION.

TITLE: GRAVABELT GSC-1 SERIES III (HYD. T/U, HYD. STEER.)				CK□70 – – –
DESIGNED BY –	DRAWN BY JC	CHECKED BY –	APPROVED BY –	
DATE 22-Sep-02	KOMLINE-SANDERSON ENGINEERING CORPORATION PEAPACK, NJ 07977 USA		REFERENCE: DRAWING NO. CK□70-10020D	REV F
SCALE 1=14				SHT 2 OF 2

PRINT MAY BE REDUCED SIZE, DO NOT SCALE. □□□□□□□□=ONE INCH(1")

01-JUL-02

A. Proposed Equipment

1. Screw Press

Qty.	Description	Unit Price, FOB Pinole, CA
1	**FKC Screw Press** **Model BHX- 1050 x 5500 L**	**US$ 354,425 each**
	Material:	50P:50S Municipal Anaerobically Digested Sludge
	Inlet Capacity:	625dry pounds per hour 7.5 dry tons per 24 hour day
	Inlet consistency:	1.5 to 2.5 % TS
	Outlet consistency:	22 - 26 % Total Solids with Polymer Use
	Nonvolatile solids content: (Ash Content)	36 % or higher
	Fiber content:	12 % or higher
	Materials of construction:	304 Stainless Steel wetted parts, Base coated CS Non-wetted parts coated CS
	Screw design:	304 Stainless Steel wetted parts
	Screens:	Perforated 304 Stainless Steel
	Speed reducer:	Sumitomo Cyclo reducer
	Motor:	5.0 HP, 1800 rpm, NEMA B, 480 VAC, 3 Ph, 60 Hz **motor included** Suitable for variable speed operation w/ PWM constant torque inverter, **VFD not included**
	Other:	1 set standard tools 1 set drum covers 1 motor coupling 4 spare screens

A. Proposed Equipment (con't)

2. Flocculation Tank

Qty.	Description	Unit Price FOB Pinole, CA
1	**285 gallon Flocculation Tank variable speed agitator**	**Included in screw press pricing**
	Drive:	SEW Eurodrive Varimot gearmotor with mechanical speed variator
	Motor:	1.0 or 1.5 HP, 1800 rpm, manufactured by SEW 480 VAC, 3 Ph, 60 Hz included
	Materials of construction:	304 Stainless Steel wetted parts

B. Miscellaneous

1. Delivery

The screw press and flocculation tank will be ready to ship within **four (4)** months after receipt of written purchase order. Delivery will be within **five (5)** months after receipt of purchase order to your facility.

2. Shipping Arrangements

The FKC screw press will be shipped via 40' and/or 20' open top container from Fukoku Kogyo's (FKC Japan) Ishinomaki, Japan factory to the **nearest port** then best way overland to Pinole, CA.

The flocculation tank will be shipped best way from our facility in Port Angeles, WA.

3. Price Summary

BHX-1050x5500L Screw Press	US $ 354,425
285GL Flocculation Tank	Included
Total , FOB Pinole, CA	**US $ 354,425**

These prices do not include taxes or bonding.

This pricing does not include any other ancillary equipment needed for a dewatering installation, i.e. pumps, valves, polymer system, field instrumentation, power control, logic control, conveyors, etc.

4. Effective Period

This proposal shall remain valid 60 days from the date of the proposal.

5. Payment Terms

30% with certified drawings
30% with shipment
40% with delivery

FKC understands that if required by contracts that 10% of all payments can be retained until performance guarantees are met.

Net 30 days

6. Installation

The screw press is shipped in one main piece and is marked for ease of installation. Installation drawings are provided.

The flocculation tank and agitator assembly require field assembly. The screw motor will require field installation onto the unit.

Installation and erection assistance are not included in the price of the equipment and generally are not required. However, the service is available for our standard service rates (see the enclosed rate sheet).

7. Operator Training and Start Up

Operator and maintenance training and start up services are included in the price of the equipment. Operator and maintenance training can be accomplished in approximately two hours per group. Ideal training sessions include both classroom and on-site (at the screw press) sessions. Generally speaking training and start up can be accomplished in one trip within a three day period.

A separate performance trip is included in the price of the equipment. The performance trip can be accomplished in a two day period.

Erection assistance and a separate trip for training are not included in the price of the equipment. Additional engineering service days are billed at the rates on the enclosed rate sheet.

8. Warranty

FKC's mechanical warranty covers material and workmanship for a period of twelve (12) months from start-up or eighteen (18) months from delivery whichever occurs first.

9. Performance Guarantee

The performance figures and conditions denoted in section A of this proposal constitute FKC Co., Ltd.'s performance guarantee and the conditions required to meet the guarantee. All of the consistency figures are based on total solids (TS) not total suspended solids (TSS).

In the event that performance is not met, FKC will provide all parts, engineering, and labor associated with the work necessary to bring the equipment into conformance with the performance guarantee.

10. Documentation Schedule

A. Approval Drawings - within 3 weeks after receipt of purchase order
   To meet delivery schedule, Buyer must return Approval Drawings in 14 days.
B. Certified Drawings - within 2 weeks after return of approval drawings
C. Operation and Maintenance Manuals - 14-16 weeks after receipt of order

11. Spare Parts List

No spare parts are required for the first 1-2 year period of operation.
A list of long term spare parts is available upon request.

12. Service Rates

The following are rates and terms for erection supervision, start-up supervision and in-site training furnished by FKC:

If required, round-trip airfare (coach class) from Port Angeles, WA to airport nearest work site.

Weekdays

$1000.00 - Per eight (8) hour day on weekdays plus, lodging, and rental car expenses.
$187.50 - Per hour for all hours exceeding eight (8) hour workday on weekdays.
$108.00 - Per hour for office engineering services and telephone consultations.

Saturdays, Sundays and Holidays

$1,440.00 - Per eight (8) hour day plus lodging and rental car expenses.
$270.00 - Per hour for all hours exceeding eight (8) hour workday.

Travel Time - Weekdays

$80.00 - Per hour travel time. (Not to exceed $990/day)

Travel Time – Weekends and US Holidays

$120.00 - Per hour travel time (Not to exceed $1,440/day)

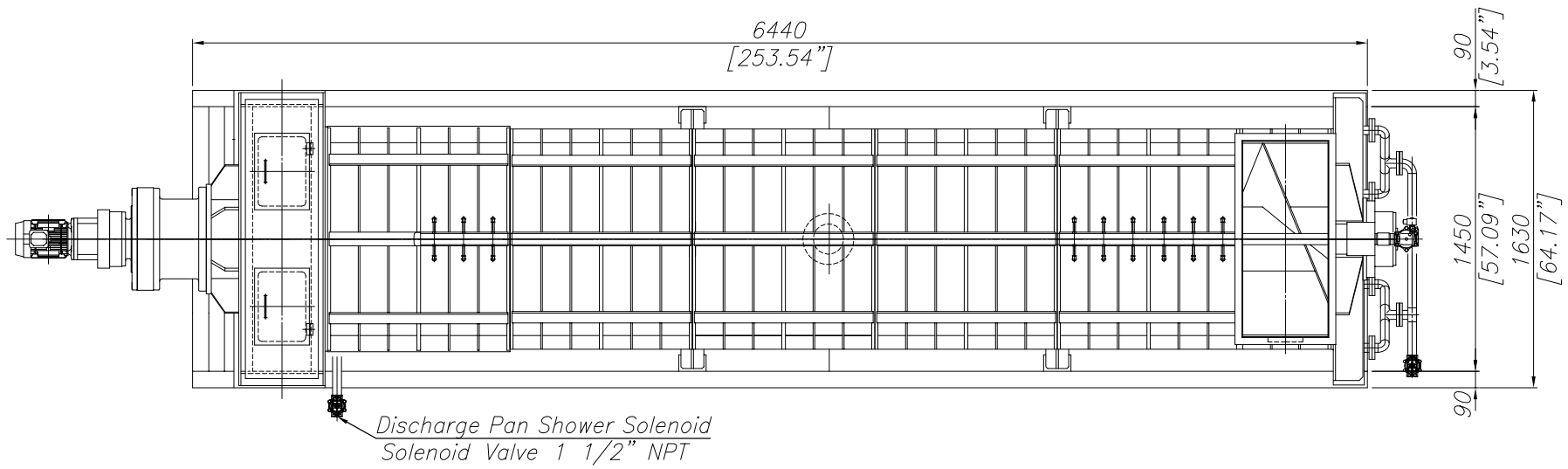

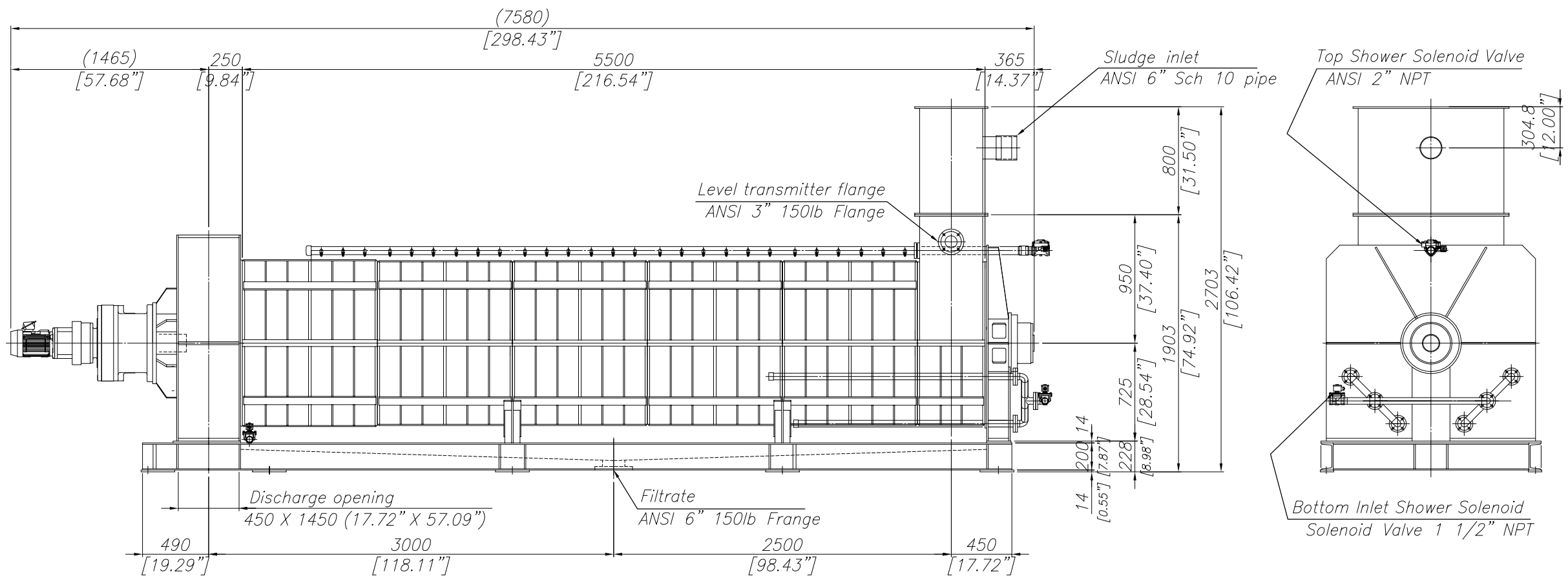

Cyclo reducer, CHVJ 6235DA-6177
with C-face adaptor

Variable speed motor
Motor 3 HP, 1800rpm (182TC)

REFERENCE

Total weight = 9,000 kg (19,841 lbs)
Operating weight = 13,500 kg (29,762 lbs)

Screw Rev.
450 ~ 1800 X 1/6177 = 0.073 ~ 0.291 rpm

Rev.	Date	Description	Drawn by	Rev. by	Appd. by
0	12/15/10	Issued for Reference	S.ENDO		KAL

Mark	Description	Material	Pcs.	Weight	Remarks

Purchaser	FKC Co., Ltd	Quantity 1
End user	REFERENCE	Scale
Job name	BHX-1050X5000L Screw press	1/25
Dwg. name	SP Assembly	
Job No.	Reference Drawing	
Dwg. No.		

FUKOKU KOGYO CO., LTD.

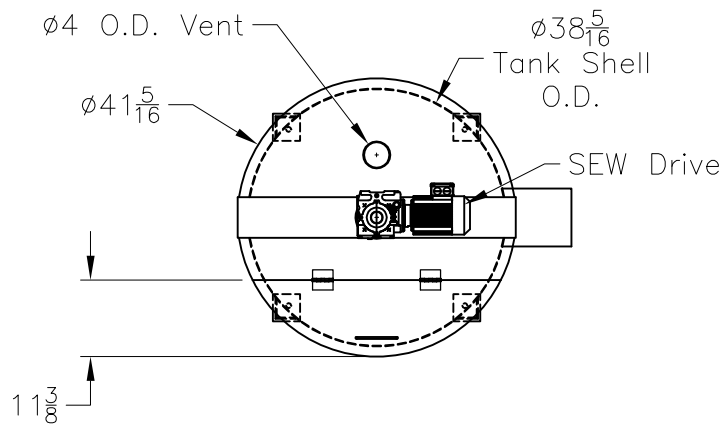

DETAIL A
4X SCALE
4 PLCS

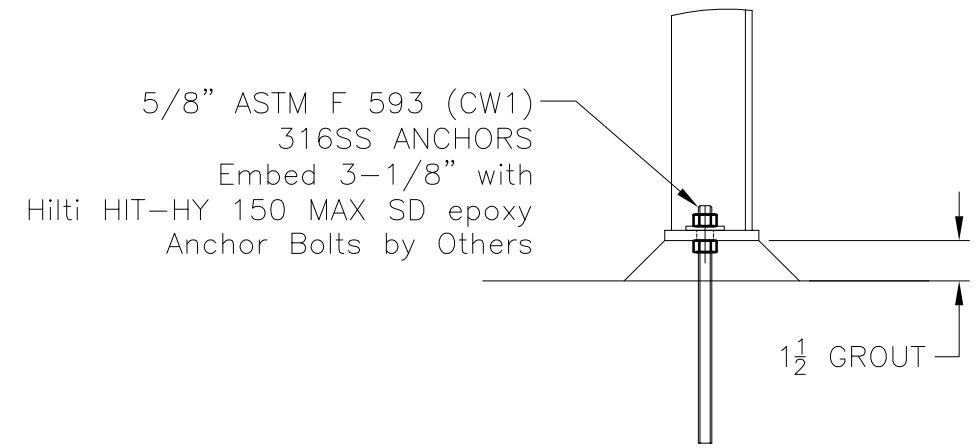

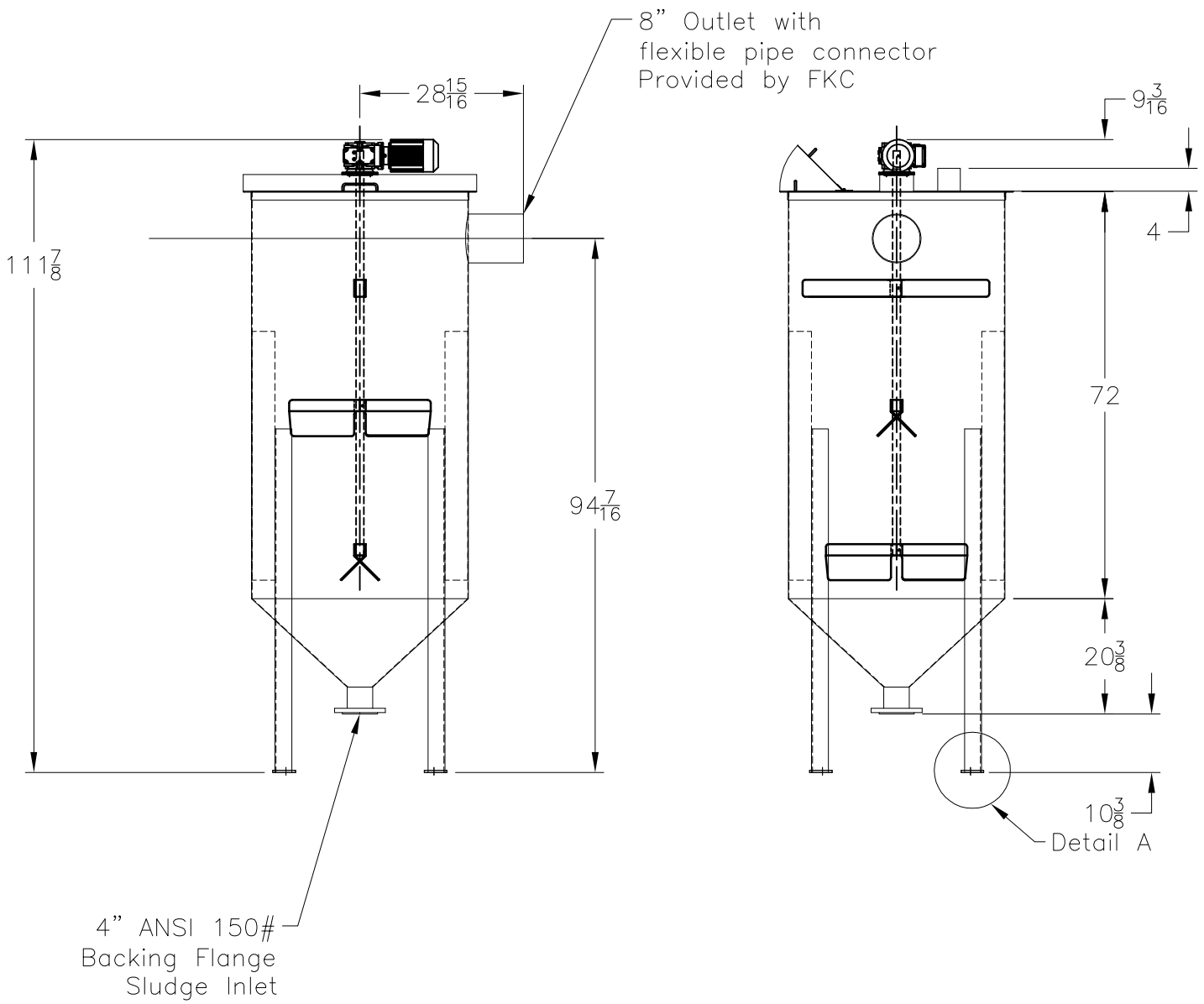

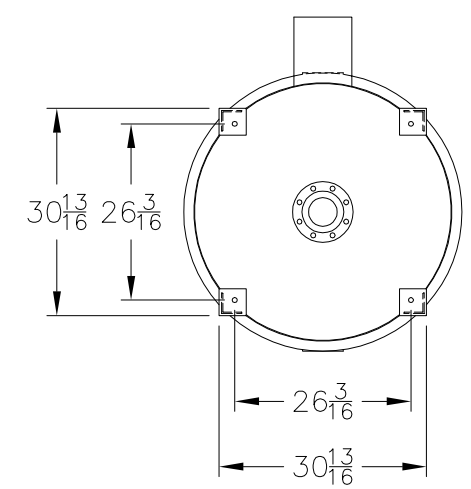

CHARACTERISTICS:

TANK MATERIAL: 316SS
TANK VOLUME: 285 GAL
DRY WEIGHT: 800 lbs
FULL WEIGHT: 3,674 lbs
AGITATOR: SEW EURODRIVE
MODEL # SAF47-AM143TC-KS 38.23:1
BALDOR MOTOR SUPPLIED BY FKC
MOTOR: 1 HP, 1800 RPM, 143T FRAME
MODEL # IDXM7014T
230-460 VAC, 3 PHASE
SHAFT SPEED: 11 ~ 45 RPM

No.	Revision	Date	Sign.

JOB No.	Messrs. *Reference*	Quantity 1	Total Lbs.
Drawing No. A-250	Title *285 Gal Floc Tank ASSEMBLY*	Date 11/18/11	
		Drawn by RTB	Ref. JOB No.

FKC CO., LTD.
2708 W. 18TH ST.
PORT ANGELES, WA 98363
(360) 452-9472 FAX (360) 452-6880

Revision	Sheet
1	1 of 1

Appendix C. Cost Estimates

DRAFT

Pinole Hercules WPCP Upgrades
Cost Summary
TM #13 - Solids Handling Options

CSI Division	Option 1: RST and Centrifuge	Option 2: GBT and BFP	Option 3: RST - Screw Press
1 - General Requirements	$385,500	$336,500	$361,400
2 - Sitework	$180,745	$180,745	$180,745
3 - Concrete	$356,700	$356,700	$356,700
4 - Masonry	$92,500	$92,500	$92,500
5 - Metals	$69,550	$69,550	$69,550
6 - Rough Carpentry And Plastics	$100,000	$100,000	$100,000
7 - Thermal & Moisture Protection	$15,000	$15,000	$15,000
8 - Doors & Windows	$15,500	$15,500	$15,500
9 - Finishes & Protective Coatings	$15,000	$15,000	$15,000
10 - Specialties	$12,000	$12,000	$12,000
11 - Equipment	$1,273,300	$1,077,000	$1,214,800
12 - Furnishings	$0	$0	$0
13 - Instrumentation	$262,660	$223,400	$250,960
14 - Conveying Systems	$40,000	$40,000	$40,000
15 - Mechanical	$264,450	$264,450	$264,450
16 - Electrical	$262,660	$223,400	$250,960
Division Totals	$3,345,565	$3,021,745	$3,239,565
Contingency (20%)	$592,013	$537,049	$575,633
2012 Construction Cost	*$3,938,000*	*$3,559,000*	*$3,816,000*
Engineering and Administration (25%)	*$984,500*	*$890,000*	*$954,000*
Total Project Cost	*$4,922,500*	*$4,449,000*	*$4,770,000*
2016 Construction Cost	**$4,347,000**	**$3,928,000**	**$4,212,000**

Option 1 - RST-Centrifuge
Option 2 - GBT-BFP
Option 3 - RST-Screw Press

Interest	2.5%
	2012
	2016